SHARP SERVICE MANUAL

CODE: 00ZARPB2A//1E

DIGITAL COPIER OPTION PRINTER UNIT

MODEL AR-PB2A

CONTENTS

[1] SYSTEM CONFIGURATION 1-1

[2] SPECIFICATION 2-1

[3] SETUP 3-1

[4] SETTING AND ADJUSTMENTS 4-1

[5] CONFIGURATION REPORT AND TEST PAGE 5-1

[6] FIRMWARE VERSION UP 6-1

[7] FUNCTION AND OPERATION 7-1

CIRCUIT DIAGRAM (Refer to the AR-PB2 Service Manual)

PARTS GUIDE

Parts marked with "⚠" is important for maintaining the safety of the set. Be sure to replace these parts with specified ones for maintaining the safety and performance of the set.

SHARP CORPORATION

This document has been published to be used for after sales service only.
The contents are subject to change without notice.

CONTENTS

[1] SYSTEM CONFIGURATION 1-1
1. Hardware 1-1
   A. Main Unit 1-1
   B. System Elements 1-1
   C. Input/Output Device Options 1-1
   D. Accessory and Options 1-2
   E. List of the Applicable Models for the AR-PB2A Printer Expansion Kit 1-2
2. Software Configuration 1-3

[2] SPECIFICATION 2-1
1. General Specification 2-1
   A. PS Specification 2-1
   B. Printer Driver Compatibility 2-1
2. Printing Function Specification 2-2
   A. Outline 2-2
   B. Details 2-4

[3] SETUP 3-1
1. Parts list 3-1
2. Preliminary work 3-1
3. Hardware setup 3-1
   A. Common work 3-1
   B. Stand-alone environment (Printer (parallel) cable connection) 3-3
   C. Network environment (Network card installation) 3-4
4. Setup on the copier side 3-4
   A. Setup by simulation 3-4
   B. Setup by key operator program 3-4
5. Software installation and setup 3-4
6. Setup under network environment 3-4
   A. Outline of the NW Setup 3-4
   B. Checking the Hardware and Software Requirements 3-5
   C. Confidential Print 3-5
   D. Tandem Print 3-5
7. Web Page Setting 3-5
   A. Password Setting 3-5
   B. E-mail Setup and Network Scanning Setup 3-5

[4] SETUP AND ADJUSTMENTS 4-1
1. Configuration setting 4-1
   A. Printer setting 4-2
   B. Interface Settings 4-2
   C. Network Settings 4-2
   D. Print Test Page 4-3
   E. Initialization and/or Storage Setting 4-3
2. Key operator programs 4-3
3. Hardware setup and adjustments 4-4
   A. Flash Memory write protect setting 4-4
   B. Laser power setup 4-4
   C. Centro interface adjustment 4-4
   D. NVRAM clear 4-4
   E. Network card check 4-4

[5] Configuration Report and Test Page 5-1
1. Samples 5-1
2. Description of Each contents 5-1
   A. Hardware Status 5-1
   B. Software Information 5-3

[6] FIRMWARE VERSION UP 6-1
1. Printer controll PWB 6-1
   A. Cases where flash memory rewriting is required . . . 6-1
   B. Necessary tools 6-1
   C. Procedure 6-1
2. Network card 6-1
   A. Check the version number of the network card. 6-1
   B. Upgrade of network card The upgrade tool is included in the PRINTER UTILITIES CD-ROM. 6-1

[7] FUNCTION AND OPERATION 7-1
1. Multi Function 7-1
2. Printer Operation / Message Display 7-2
3. Emulation Switch 7-3
4. Resolution 7-3
5. Font 7-3
   A. Downloadable Font Types 7-3
   B. Location of Font Data 7-3
6. Language 7-3
   A. Language Selection 7-3
   B. Job, control 7-3
7. Host I/O Port Selection 7-3
13. Memory Configuration 7-4
14. Printer control PWB switch (short pin) and LED display 7-4
15. Confidential Print 7-5
16. Tandem Print 7-5

(Error Messages)

• PARTS GUIDE

[1] SYSTEM CONFIGURATION

1. Hardware

A. Main Unit

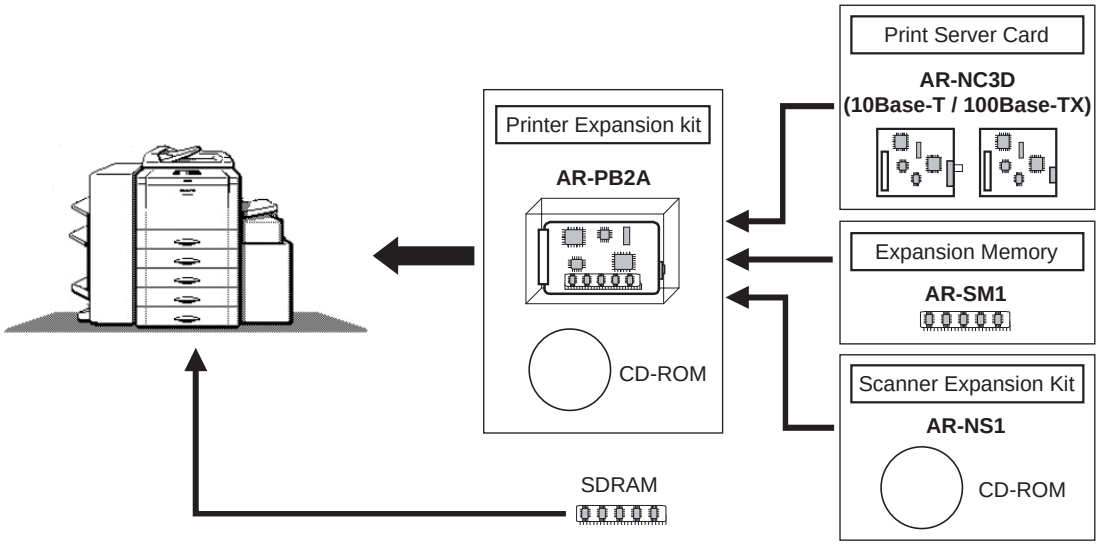

(1) Print Controller Hardware and Options

Controller Hardware

Hardware configuration is as follows:

- ProcessorR 4700
- Base Memory 16 MB
- Flash Memory 1 slot with 8 MB
- Memory Expansion 2 Standard 72 pin SIMM slots
- Parallel Interface 1 IEEE 1284 compatible Type B
- Network Expansion Slot 1 Internal slot

(2) Options

DRAM

The system can optionally be configured with up to 64-MB optional DRAM Using industry standard, 16 or 32 Mb72 pin SIMMs.

Network Server Card

AR-PB2 Printing system can optionally be configured with Network Server Card of supporting 10Base-T and 100Base-TX.

B. System Elements

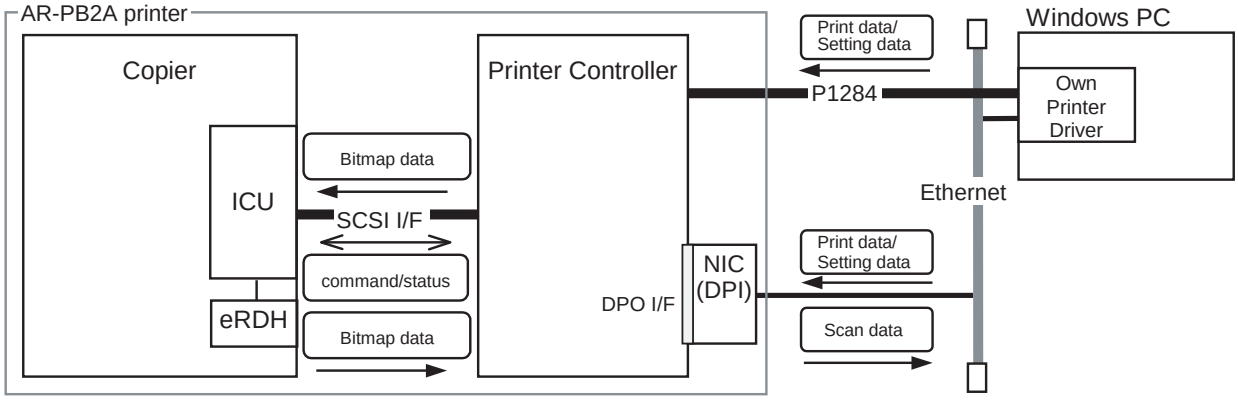

C. Input/Output Device Options

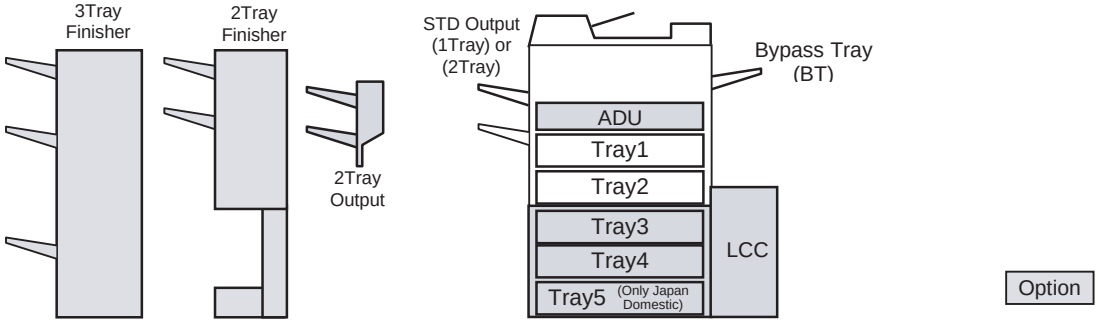

D. Accessory and Options

	Part name		Model	Q'ty	Note
Accessories	SCSI cable			1	
	Wire saddle			1	
	Band			1	
	Printer box installing screw			5	
	Printer control PWB			1	With frame
	Printer driver	Printer Driver (including PPD File)		1	
		Screen Font		1	
		Resident-FontData Install Utility		1	
		Printer Administration Utility ver.2.x		1	
		NWsetup		1	
		Printer Status Monitor ver.2.0		1	
		Integrated Installer		1	
		Makedisk Utility		1	
	Installation manual			1	
	Operation Manual			1	
	Label			1	Only for Sweden and Norway
Option	SIMM memory	16MB			ED0 type/Without parity/70ns or above The copier ICU PWB requires the total memory of 16MB(20MB) or more. The printer control PWB has two expansion slots to which 16MB or 32MB memory can be additionally installed. (16MB onboard)
		32MB			
	Network card		AR-NC3D	1	10Base-T / 100Base-TX
Separate purchase (User purchase)	Printer (parallel) cable				Necessary when the copier is used as a stand-alone machine.

E. List of the Applicable Models for the AR-PB2A Printer Expansion Kit

The details of the specifications, features, and options of the printer may vary with the printer models. Some features described in this manual may not be available depending on the printer drivers.

Model Name	AR-280	AR-285	AR-335	AR-250	AR-281	AR-286	AR-336	AR-405	AR-505	AR-287	AR-337	AR-407	AR-507
Hard disk drive	Yes	Yes	Yes	No *1	Yes	Yes	Yes	Yes	Yes	Yes	Yes	Yes	Yes
Capacity	2GB *2	2GB *2	2GB *2	1GB	2GB	2GB	2GB	2GB	2GB	4.3GB	4.3GB	4.3GB	4.3GB
Reverse order printing	Yes			Yes				Yes	No	Yes			No
Photo enhancement	No			No				No	Yes	Yes			Yes
Toner save/ smoothing	No			Yes				Yes	Yes	Yes			Yes
Confidential print	No			No				No	No	Yes			Yes
Tandem print	No			No				No	No	No	Yes		Yes
Status/alert by E-mail	No			No				No	No	Yes			Yes
Account control	No			No				No	No	Yes			Yes
Network scanner *3	No			No				No	No	Yes			Yes

*1 Optional

*2 Some units of the models may come with a 1 GB hard disk drive.

*3 Optional AR-NS1 is needed.

AR-PB1 A and AR-PB2 A are available for following models however, the available functions can vary with the copier models installed.

2. Software Configuration

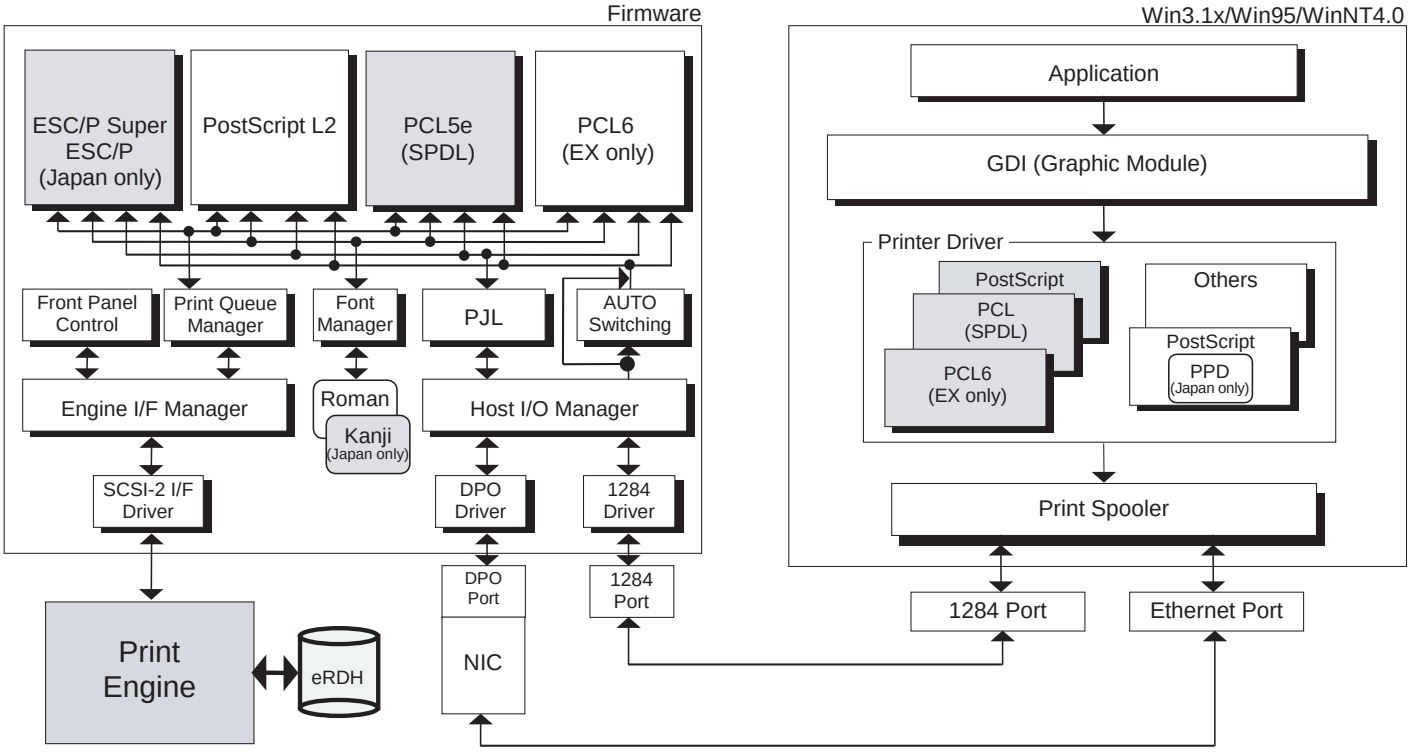

[2] SPECIFICATION

New function provided by combination use with AR-287/337/407/507

- Confidential Print
- Tandem Print
- E-mail Status/E-mail Alerts
- Potential to enhance the Network Document Scanner

1. General Specification

A. Specification

Platform *1		IBM PC/AT (Include compatible machine) Macintosh (680 x 0) Power Macintosh, iMac
Support OS (Printer Driver)	Custom PS	Windows 3.1/WfW3.11 Windows 95/98 Windows NT 4.0 Windows 2000
	Custom SPDL	N/A
	Custom PCL5e	Windows 3.1/WfW3.11 Windows 95/98 Windows NT4.0 Windows 2000
	Custom PCL6	Windows 95/98 Windows NT4.0 Windows 2000
	Windows PPD	Windows 95/98 Windows NT 4.0 Windows 2000
	Macintosh PPD	MacOS 7.6 – 8.6 MacOS9
PDL		PCL5e emulation PCL6 emulation PostScript Level 2 emulation
Network 1	Interface	10/100Base-T (AR-NC3D)
	Support OS	UNIX Windows 3.1/95/98 Windows NT3.51/4.0 Windows 2000 Novell NetWare 3.x / 4.x / NetWare 5 Macintosh System 7.x / MacOS 7.5.x / MacOS 8.x / MacOS 9
	Base Protocols	IPX/SPX for Novell TCP/IP for Windows and UNIX EtherTalk for Macintosh
	Printing Protocols	PSERVER for NDS or bindery environment with Novell LPR / LPD EtherTalk FTP TCP Raw Socket (Direct Dump)
CPU		R4700 (64bit RISC / 150MHz)
Memory	Standard	EDO RAM 16 MB
	Max	80 MB
	Slot	2 Slots EDO type 72pin standard SIMM 16MB or 32MB
Resident Fonts	For PS	80 fonts (Same 80 fonts as PCL)
	For PCL5e, PCL6, SPDL	80 fonts (Same 80 fonts as PS) Line Printer

B. Printer Driver Compatibility

NO.	PRINTER DRIVER	WIN 3.1	WIN 95/ WIN 98	WIN NT
1	Windows PS	×	×	×
2	Windows PPD		×	×
3	Windows PCL5e	×	×	×
4	Windows PCL6		×	×

NOTE: Users of Windows will obtain maximum functionality and better output quality by installing the Windows PostScript® Printer driver. Alternatively, the Windows PCL5e driver will provide the best print speed.

Language Localization

The description of the driver including the help file, front panel menu and print text must be provided in various languages as follows:

Language	PCL5e driver	PCL6 driver	SPDL driver	Windows PS2 driver	Windows PPD	Macintosh PPD	Printer Front Panel Demo Pages
English	❍	❍		❍	❍	❍	❍
German	❍	❍		❍	❍	❍	❍
French	❍	❍		❍	❍	❍	❍
Italian	❍	❍		❍	❍	❍	❍
Spanish	❍	❍		❍	❍	❍	❍
Dutch	❍	❍		❍	❍	❍	❍
Swedish	❍	❍		❍	❍	❍	❍
Japanese			❍	❍	❍	❍	❍

"Localization" includes changing default paper selection etc. to meet the needs of each market.

The following is language-application matrix.

Language	Printer Administration Utility	Printer Status Monitor	NW Setup	Integrated Installer
English	❍	❍	❍	❍
German	❍	❍	❍	❍
French	❍	❍	❍	❍
Italian	❍	❍	❍	❍
Spanish	❍	❍	❍	❍
Dutch	❍	❍	❍	❍
Swedish	❍	❍	❍	❍
Japanese	❍	❍	❍	❍

2. Printing Function Specification

A. Outline

(1) Windows

Function		PCL5e custom driver	PCL6 custom driver	PS custom driver	PPD file *1
General	Copies	1-999	←	←	←
	Orientation	Portrait Landscape	←	←	←
	Reverse Order	Yes / No	←	←	←
	Duplex	1-Sided 2-Sided (Left /Top/Right Binding)	←	←	1-Sided 2-Sided (Long/Short Binding)
	Booklet	Invoice on Letter Letter on Ledger A5 on A4 A4 on A3 B5 on B4	Invoice on Letter Letter on Ledger A5 on A4 A4 on A3 B5 on B4 Letter on Letter Ledger on Ledger A4 on A4 A3 on A3 B4 on B4	←	N/A
	Binding Edge	Left / Top / Right	←	←	Long / Short
	N-up	N/A	2/4/6/8/9/16	←	2/4 *2
	N-up Order	N/A	Z	←	←
	N-up Border	N/A	Yes / No	←	Always Yes
Paper Input	Paper Size	A3 / B4 / A4 / B5 / A5 / A6 / Japanese Postcard / Ledger / Legal / Foolscap / Letter / Executive / Invoice	←	←	←
	Custom Paper Size	1 size	←	1 size	3 sizes (0 sizes for WindowsNT and Windows2000)
	Source Selection	Automatic Bypass-Tray Bypass-Tray(Manu.) Tray 1/2/3/4 Large Capacity Tray	←	←	←
	Different 1st Page	Yes / No It is possible to select whether print back-side of first paper with duplex	←	←	N/A
	Transparency Inserts	No Yes (Blank) Yes (Printed)	←	←	Yes
Paper Output	Output Tray Selection	1 Exit Tray Not Selectable 2 Exit Trays Top Tray Second Tray 2 Tray Finisher Top Tray Offset Tray 3 Tray Finisher Top Tray Second Tray Offset Tray	←	←	←
	Face-up/down	Yes / No	←	←	←
	Staple	2 Tray Finisher Yes / No 3 Tray Finisher No staple 1 staple 2 staples	←	←	←

Function		PCL5e custom driver	PCL6 custom driver	PS custom driver	PPD file *1
Graphic	Resolution Setting	600dpi	←	←	←
	Halftone Setting	N/A	Photo image Line image Scan image	Screen Frequency 8.0 to 360.0 in 0.1 steps Screen angle 0.0 to 360.0 in 0.1 steps	←
	Graphics Mode	Raster HP-GL2	Raster Vector	N/A	←
	Smoothing	Yes / No	←	←	←
	Toner save	Yes / No	←	←	←
	Photo Enhancement	N/A	N/A	Yes / No	N/A
	Negative Image	N/A	←	Yes / No	←
	Mirror Image	N/A	←	Horizontal Vertical	Horizontal
	Zoom	N/A	←	N/A	25-400%
	Fit to Page	Yes	←	←	N/A
Font	Resident Font	80 fonts Category 1, 3 and 4 In font chapter	←	←	←
	Download Font	Bitmap TrueType Graphics	←	Bitmap Type1 TrueType	←
Others	Configuration Setting	Yes	←	←	←
	Watermark	Yes	←	←	N/A
	Form Overlay	Yes	←	N/A	←
	Confidential Print	Yes	←	←	N/A
	Print Accounting	Yes	←	←	N/A
	Tandem Print	Yes	←	←	←
	Job End Notification	Yes	←	←	N/A

*1...This file is required for printing on the Cougar using Adobe PS driver (V4.0)

*2...Windows NT does not support N-up printing. All Windows but NT support 2-up and 4-up only.

(2) Macintosh

Function		Macintosh PPD file
General	Copies	1-999
	Orientation	Portrait Landscape
	Reverse Order	Yes / No
	Duplex	1-Sided 2-Sided (Left /Top/ Right Binding)
	Booklet	N/A
	Binding Edge	Long / Short
	N-up	2/4/6/9/16
	N-up Order	Z / reversed Z
	N-up Border	None / Single Hairline / Single Thinline / Double Hairline / Double Thinline
Paper Input	Paper Size	A3 / B4 / A4 / B5 / A5 / A6 / Japanese Postcard / Ledger / Legal / Foolscap / Letter / Executive / Invoice
	Custom Paper Size	N/A
	Source Selection	Automatic Bypass-Tray Bypass-Tray(Manu.) Tray 1/2/3/4 Large Capacity Tray
	Different 1st Page	Yes / No
	Transparency Inserts	No Yes (Blank) Yes (Printed)

Function		Macintosh PPD file
Paper Output	Output Tray Selection	1 Exit Tray Not Selectable 2 Exit Trays Top Tray Second Tray 2 Tray Finisher Top Tray Offset Tray 3 Tray Finisher Top Tray Second Tray Offset Tray
	Face-up/down	Yes / No
	Staple	2 Tray Finisher Yes / No 3 Tray Finisher No staple 1 staple 2 staples
Graphic	Resolution Setting	600dpi
	Halftone Setting	N/A
	Graphics Mode	N/A
	Smoothing	Yes / No
	Toner save	Yes / No
	Photo Enhancement	N/A
	Negative Image	Yes / No
	Mirror Image	Horizontal Vertical
	Zoom	25-400%
	Fit to Page	N/A

Function		Macintosh PPD file
Font	Resident Font	35 fonts Category 1 In font chapter
	Download Font	N/A
Others	Configuration Setting	Yes
	Watermark	N/A
	Form Overlay	N/A
	Confidential Print	Yes (PIN selection)
	Print Accounting	Yes
	Tandem Print	Yes
	Job End Notification	N/A

NOTE: When the AR-PB2A is installed in AR-505/507/407/337/287, the Printer Administration Utility is fully functional; however, if the AR-PB2A is installed in other models, its functionality is limited as follows:

AR-505/507/407/ 337/287	All functionality is supported.
AR-405/336/286/ 281/250	Printing Settings tab and Resources tab are not displayed.
AR-335/285/280	Printing Settings tab and Resources tab are not displayed. Some information display may be limited.

B. Details

(1) Connectivity

a. Direct Connection

The Cougar print system supports IEEE 1284 (parallel)-connection.

Direct Connection Type	Properties
IEEE 1284	• IEEE 1284 Compliant • Compatible • Connector: 1 (Type B)

b. Internal Network Connection

The Cougar print system supports an internal network connection. Installing either of the following print server cards allows the system to connect to the network.

Model Name	Network Type
AR-NC3D	10Base-T / 100Base-TX

c. Network Print Channel

The Cougar printing system supports the following network print channels.

- PSERVER for NetWare Environment
- LPR / LPD
- EtherTalk (AppleTalk)
- FTP
- TCP Raw Socket

(2) Printer Controller

a. Hardware

CPU: R4700 150MHz(64Bits RISC)

Peripheral ASIC: Galileo-Technology GT-64010A
DRAM Controller
DMA-4 ch (SCSI, P1284, IDE, Option I/F)

ROM:
Flash ROM 8 MB
(Boot (Sim)&Main Program/ Roman Font)*1
EEPROM 8 KB

RAM:
DRAM 16 MB (EDO)
SIMM 2 slots: 16/32 MB (Max. 32x2 + 16 = 80 MB)

Host I/O:
P1284 1ch: B connector (CL-CD1283)
16bits bus DMA
External I/O 1ch: DPO Type2 for DPI (HBM) NIC (optional)

Engine I/F:
SCSI-2 1ch: Asynchronous and Synchronous/16bits bus DMA

b. Firmware

Job Control: PJL(PJL is used in emulations other than PCL5e.)

Emulation: PCL5e
PostScript

Emulation Switching AUTO, PS, PCL

Resident Fonts:
PCL5e (SPDL) 80 Fonts (HP8000 Typeface compatible)
Lineprinter
PostScript
Roman 80 Fonts (Adobe PS Printer Typeface compatible)
PCL6 80 Fonts

Host I/O:
P1284
Compatible, Nibble for PnP
External I/O DPO Type2 for DPI (HBM) NIC
I/O Switching AUTO, P1284, NIC

Engine I/F:
SCSI-2 Asynchronous and Synchronous /DMA transfer

c. Emulation

Automatic (PCL5e ↔ PS ↔ PCL6)
PCL (fixed)
PostScript (fixed)
SPDL (fixed)

Emulation switching is performed in the following manner.

PJL Command for Specifying an Emulation	Specified Emulation	Emulation Setting		
		Automatic		Fixed
		Automatic Sensing		
No		OK	Uses the emulation automatically selected.	Uses a default emulation.
		NG	Uses PCL	
Yes	Yes	Uses the emulation specified.		Uses the emulation specified.
	No	Uses PCL		Uses a default emulation.

In the automatic emulation sensing mode, for print data without the PJL command, the emulation is automatically switched either to PostScript, PCL5e based on data sensed. In other words, automatic emulation sensing (switching) is available only between PostScript and PCL5e. For print data with the PJL command, the emulation is automatically switched to the specified one without sensing the data. When print data without the PJL command fails to be sensed, or when the print data is given the PJL command but the specified emulation is not present, the data is handled in the PCL emulation.
In the fixed emulation mode, for print data without the PJL command, the fixed emulation is used to handle the print data. Print data with the PJL command is switched to the specified emulation. When print data is given the PJL command but the specified emulation is not present, the data is processed by the default emulation.
The PJL Enter command specifies PostScript and PCL5e.

(3) Engine Spec.

Maximum Paper Size	A3, 11" x 17"
Print Resolution	600 x 600 dpi
Smoothing	Yes
Toner Save Print	Yes
Photo Enhancement	Yes
Engine Speed	28ppm: AR-287 33ppm: AR-337 40ppm: AR-407 50ppm: AR-507 (8.5" x 11 continuous printing of same page)
Print Speed	28ppm: AR-287 33ppm: AR-337 40ppm: AR-407 50ppm: AR-507 (Tested by continuous printing of 4Kcharacter/Page text data)
Input Paper Trays	Standard: Tray 1 / Tray 2 / Bypass Tray Option: Tray 3 / Tray 4 / LCC
Support Paper Sizes	A6, A5, A4, A3, B5, B4, Japanese Postcard (148 x 100mm), 5.5" x 8.5"(Invoice), 7.25" x 10.5"(Executive), 8.5" x 11"(Letter), 8.5" x 13"(Foolscap), 8.5" x 14"(Legal), 11" x 17"(Ledger) Custom (Max;297 × 432_Min;100 × 148)
Output Devices	1 Exit Tray 2 Exit Trays (for AR-287 / AR-337 / AR-407) 2-Tray Finisher (for AR-287 / AR-337 / AR-407) Face-up 3-Tray Finisher (for AR-287 / AR-337 / AR-407) Face-down 3-Tray Finisher (for AR-507)
Electric Collation	Support By E-RDH (Software collation will not be supported.)
Duplex Printing	Yes with duplex option

(5) Print Area

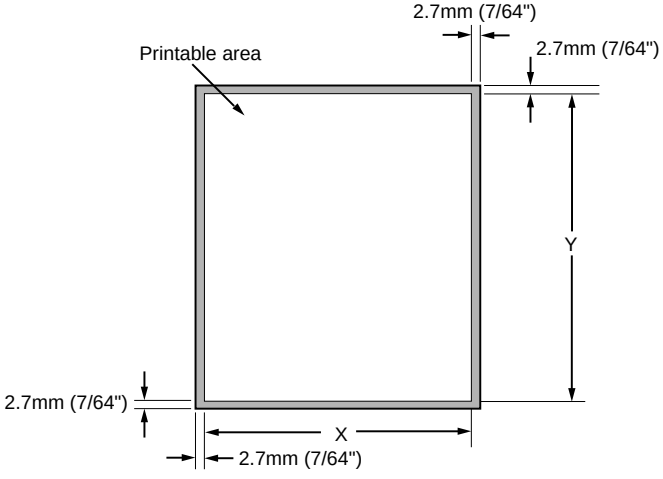

Paper size	X	Y
A3	6912	9824
B4	5952	8480
A4	6912	4864
B5	5952	4192
A5	4864	3392
A6	2368	3392
Ledger	6464	10080
Letter	6464	4992
Legal	4992	8288
Invoice	4992	3168
Executive	4224	6176
Foolscap	4992	7680
Japanese Postcard	2240	3392

(dots in 600 dpi)

(6) Font

a. Resident Font

Resident Fonts

Emulation		Resident Font
PCL5e PCL6	Roman	80 Fonts (Bitstream) 1 Font-Bitmap (Bitstream)
PostScript	Roman	80 Fonts (Bitstream)

1) PCL5e Roman fonts

Font format: (80 fonts), Bitmap(1 font)

Font data size: Approx. 1.9MB

Font supplier: Bitstream

Font name
Dutch™ 801 SWC
Dutch 801 Italic SWC
Dutch 801 Bold SWC
Dutch 801 Bold Italic SWC
Swiss™ 742 SWC
Swiss 742 Italic SWC
Swiss 742 Bold SWC
Swiss 742 Bold Italic SWC
Swiss 742 Condensed SWC
Swiss 742 Condensed Italic SWC
Swiss 742 Condensed Bold SWC
Swiss 742 Condensed Bold Italic SWC
Incised 901 SWC
Incised 901 Italic SWC
Incised 901 Bold SWC
Zapf Humanist 601 SWC
Zapf Humanist 601 Italic SWC
Zapf Humanist 601 Bold SWC
Zapf Humanist 601 Bold Italic SWC
Aldine 430 Original Garamond SWC
Aldine 430 Original Garamond Italic SWC
Aldine 430 Original Garamond Bold SWC
Aldine 430 Original Garamond Bold Italic SWC
Fixed Pitch 810 Courier Roman SWC
Fixed Pitch 810 Courier Italic SWC
Fixed Pitch 810 Courier Bold SWC
Fixed Pitch 810 Courier Bold Italic SWC
Fixed Pitch 850 Letter Gothic 12 pitch/text SWC
Fixed Pitch 850 Letter Gothic Bold 12 pitch/text SWC
Fixed Pitch 850 Letter Gothic Bold Italic 12 pitch/text SWC
Flareserif 821 SWC
Flareserif 821 Extra Bold SWC
Clarendon 701 Clarendon Condensed SWC
Ribbon 131 SWC
Audrey Two SWC
Swiss 721 SWM *1
Swiss 721 Oblique SWM *1
Swiss 721 Bold SWM *1
Swiss 721 Bold Oblique SWM *1

Dutch 801 SWM *1
Dutch 801 Italic SWM *1
Dutch 801 Bold SWM *1
Dutch 801 Bold Italic SWM *1
Symbol SWA
Wingbats SWM
Line Printer *2
Dutch 801™ SWA
Dutch 801 Italic SWA
Dutch 801 Bold SWA
Dutch 801 Bold Italic SWA
Swiss™ 721 SWA
Swiss 721 Oblique SWA
Swiss 721 Bold SWA
Swiss 721 Bold Oblique SWA
Fixed Pitch 810 Courier® SWA
Fixed Pitch 810 Courier Italic SWA
Fixed Pitch 810 Courier Bold SWA
Fixed Pitch 810 Courier Bold Italic SWA
Symbol SWA (PS)
Zapf Calligraphic 801 SWA
Zapf Calligraphic 801 Italic SWA
Zapf Calligraphic 801 Bold SWA
Zapf Calligraphic 801 Bold Italic SWA
Revival 711 ITC Bookman® Light SWA
Revival 711 ITC Bookman Italic SWA
Revival 711 ITC Bookman Demi SWA
Revival 711 ITC Bookman Demi Italic SWA
Swiss 721 Narrow SWA
Swiss 721 Narrow Oblique SWA
Swiss 721 Narrow Bold SWA
Swiss 721 Narrow Bold Oblique SWA
Century 702 Century Schoolbook SWA
Century 702 Century Schoolbook Italic SWA
Century 702 Century Schoolbook Bold SWA
Century 702 Century Schoolbook Bold Italic SWA
Geometric 711 ITC Avant Garde Gothic® Book SWA
Geometric 711 ITC Avant Garde Gothic Book Oblique SWA
Geometric 711 ITC Avant Garde Gothic Demi SWA
Geometric 711 ITC Avant Garde Gothic Demi Oblique SWA
Chancery 801 ITC Zapf Chancery® Medium Italic SWA
ITC Zapf Dingbats® SWA

All above resident fonts in the column are licensed from Bitstream Inc. Dutch and Swiss are trademarks of Bitstream Inc. All other trademarks and copyrights are the property of their respective owners.

*1: These fonts cannot be used with the PS driver.

*2: For Line Printer in the above table, display font is not supplied.

2) PS2 Roman fonts

Number of fonts: 80

Font format: (All of the 80 fonts)

Font data size: Approx. 0.9MB

Font supplier: Bitstream

Font name
ITC Avant Garde Gothic® Book
ITC Avant Garde Gothic Book Oblique
ITC Avant Garde Gothic
ITC Avant Garde Gothic Demi Oblique
ITC Bookman® Demi
ITC Bookman Demi Italic
ITC Bookman Light
ITC Bookman Light Italic
810 Courier®
810 Courier Bold
810 Courier Bold Italic
810 Courier Italic
Swiss 721 Normal
Swiss 721 Bold
Swiss 721 Bold Oblique
Swiss 721 Oblique
Swiss 721 Narrow
Swiss 721 Narrow Bold
Swiss 721 Narrow Bold Oblique
Swiss 721 Narrow Oblique
Century Schoolbook Bold
Century Schoolbook Bold Italic
Century Schoolbook Italic
Century Schoolbook Roman
Zapf Calligraphic 801
Zapf Calligraphic 801 Bold
Zapf Calligraphic 801 Bold Italic
Zapf Calligraphic 801 Italic
Symbol Set
Dutch(801 Bold
Dutch 801 Bold Italic
Dutch 801 Italic
Dutch 801 Normal
ITC Zapf Chancery® Medium Italic
ITC Zapf Dingbats®

b. Download Fonts

Data formats of download fonts in each emulation are in the table below.

Emulation		Download Font
PCL5e	Roman	Bitmap TrueType Intellifont
	Kanji	N/A
PostScript	Roman	Bitmap Type 1 Type 42
	Kanji	N/A

(7) Interface Specification

The printing system supports IEEE 1284 compliant connections

	Properties
IEEE 1284	• IEEE 1284 Compliant • Compatible • Connector: 1 (Type B)

(8) Network Specification

	Interface	Support OS	Support Protocol	Area
DPI_NIC	10Base-T 100Base-TX	NetWare, Windows NT	IPX/SPX, TCP/IP, EtherTalk, Peer to Peer (IPX/SPX)	JPN, North America (USA/ CANADA), Europe, EX

[3] SETUP

1. Parts list

Before installing the printer kit, check that all the following items are prepared.
Be careful that the necessary parts depend on the environment of the copier (model and unit installation).

	Part name		Model	Q'ty	Note
Accessories	SCSI cable			1	
	Wire saddle			1	
	Band			1	
	Printer box installing screw			5	
	Printer control PWB			1	With frame
	Printer driver	Printer Driver (including PPD File)		1	
		Screen Font		1	
		Resident-FontData Install Utility		1	
		Printer Administration Utility ver.2.x		1	
		NWsetup		1	
		Printer Status Monitor ver.2.0		1	
		Integrated Installer		1	
		Makedisk Utility		1	
	Installation manual			1	
	Operation Manual			1	
	Label			1	Only for Sweden and Norway
Option	Expansion board		AR-EB1	1	The expansion board is necessary to install the printer kit to the AR-S280.
	SIMM memory	16MB			ED0 type/Without parity/70ns or above The copier ICU PWB requires the total memory of 16MB(20MB) or more. The printer control PWB has two expansion slots to which 16MB or 32MB memory can be additionally installed. (16MB onboard)
		32MB			
	Network card		AR-NC3D	1	10Base-T / 100Base-TX
Separate purchase (User purchase)	Printer (parallel) cable				Necessary when the copier is used as a stand-alone machine.

2. Preliminary work

If the version of the three kinds of flash memory installed to the copier is older than the following, upgrade is required.

Check version number, and perform the upgrade if necessary. (For the procedure, refer to the Technical Report.)

3. Hardware setup

A. Common work

(1) Printer unit installation

1) Turn "OFF" the main switch located on the left-hand side on the main copier unit.

   Next, unplug the power plug of the main copier unit from the outlet.

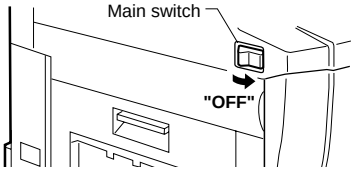

2) Removing the rear cover of the main copier unit.

   If equipped with the RADF/ADF/SPF, loosen the securing screws which the hold the RADF/ADF/SPF connector and remove the connector from the main copier unit.

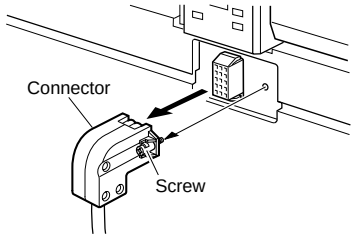

If the rear cabinet is a box type, remove the connector cover in advance.

Remove the five securing screws which hold the rear cover of main copier unit, then remove the rear cover.

Next, loosen the upper central one of four securing screws which hold the rear lower cover, then remove the rest three screws, and then remove the rear lower cover.

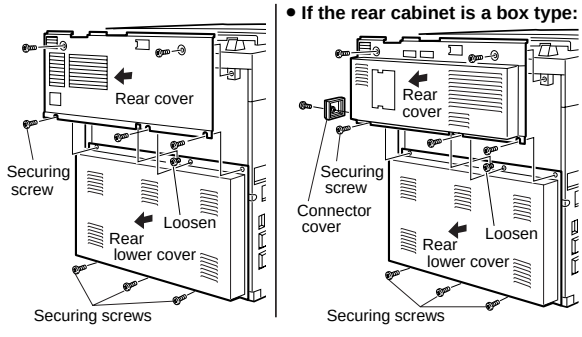

- **The installation work after this step varies with the shape of the rear cabinet.**
- If the rear cabinet is a box type, proceed to step 9.
- If the rear cabinet is not a box type, proceed to step 3.

3) Cut out the central one of three notches of upper rear cover with a nipper.

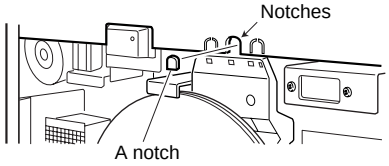

4) Remove the three securing screws which hold the flywheel and remove the flywheel.

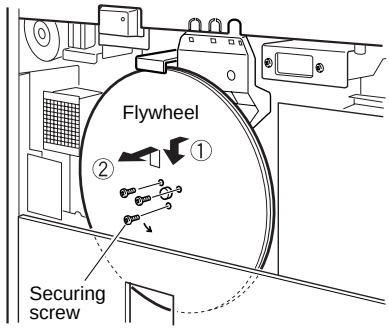

5) Remove the two securing screws which hold the shield line guide to the main drive frame and remove the shield line guide.

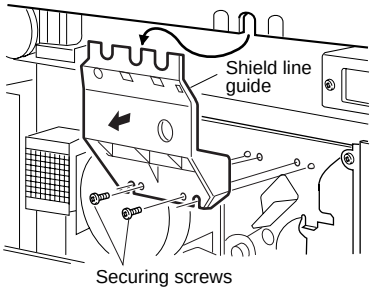

6) Plug the printer relay cable connector into the most right hand port on the ICU board.

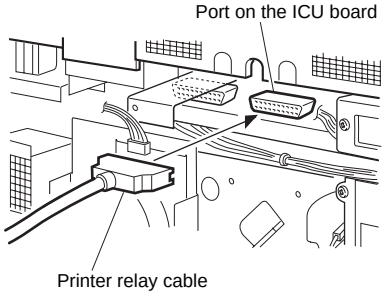

7) Place the printer relay cable into the central notch of shield line guide (the location with a letter P) and attach it temporarily with a binding band as shown in the illustration.

   Next, insert the two ribs on the main drive frame through the positioning holes of shield line guide, then use the two securing screws to secure it.

   Place the printer relay cable as shown in the illustration, then tighten the binding band and cut away the excess.

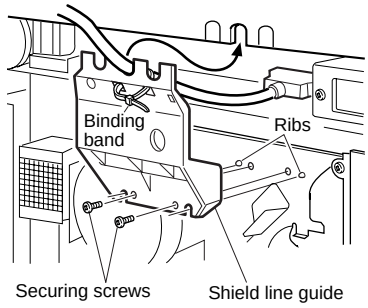

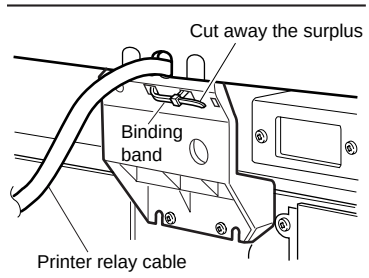

8) Reinstall the flywheel (which was removed in the step 4) onto the main drive shaft while slipping inside the exterior. Use the three securing screws to secure it.

   Make sure the arrow mark on flywheel faces toward you.

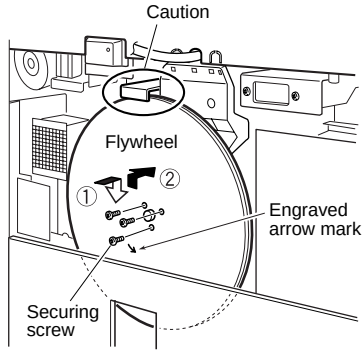

<Caution> Do not turn the flywheel with hands after installation since it may cause damage to the gears.

9) Connect the power connector of printer box unit to the power supply port on the main copier unit, then attach the printer box unit on the holes of F/P box mounting plate using the hooks.

   Using the 5 printer box securing screws, attach the printer box to the mounting plate.

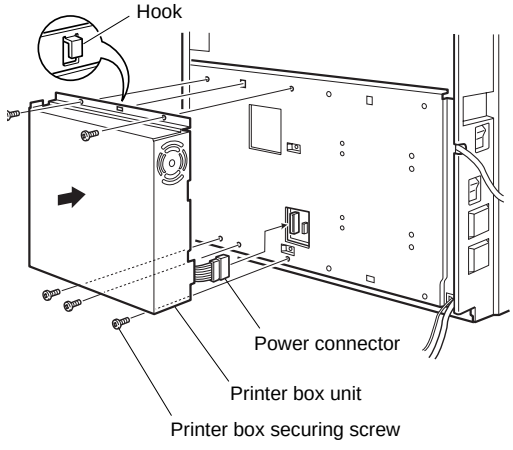

10) Remove the securing screws holding the P side OP cover in the rear lower cover which was removed in the step 2, then remove the P side OP cover.

Next, paste an attached label at the position only for Sweden and Norway as shown in the illustration.

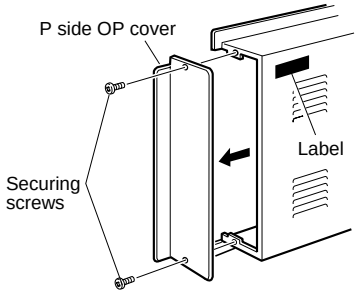

11) Hook the rear lower cover on the securing screw ④ which was loosened in the step 2 as shown in the illustration.

Next, tighten the securing screws ①, ② and ③ temporarily, which were removed in the step 2 and tighten the securing screw ④ which was loosened, then tighten the securing screws ⑤, ⑥ and ⑦.

Reinstall the rear cover which was removed in the step 2 to the original position by putting it onto the securing screws ①, ② and ③ which temporarily secure the rear cover, then tighten the securing screws ①, ② and ③ after tightening the securing screws ⑧ and ⑨.

If the rear cabinet is a box type, attach the connector cover.

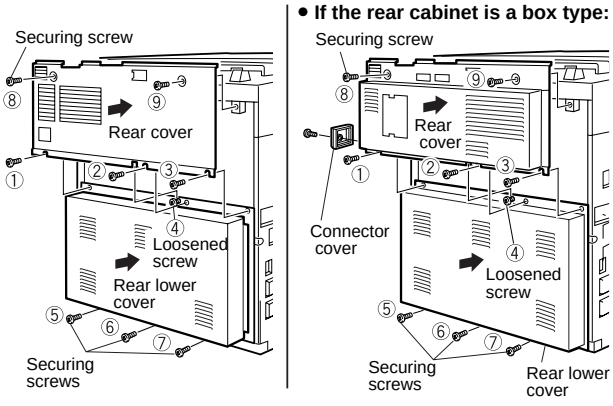

12) If the rear cabinet is a box type:

Insert the printer relay cable connector to the rightmost connector of the ICU PWB to connect it.

If an option has been already connected to the right SCSI connector of the copier, however, connect the cable to the left connector.

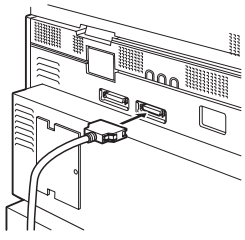

13) If the copier is equipped with an automatic document feeder, connect the connector that has been removed in step 2 to its original position of the copier and secure the connector with the attached screw.

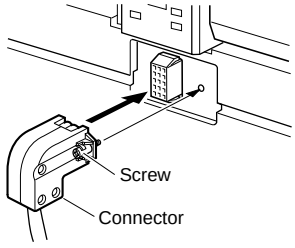

1. Connect the printer relay cable to the connector of printer box.
2. Attach the supplied wire saddles to the printer relay cable.
3. Insert and fix the wire saddle at the position of rear lower cover as shown in the illustration.

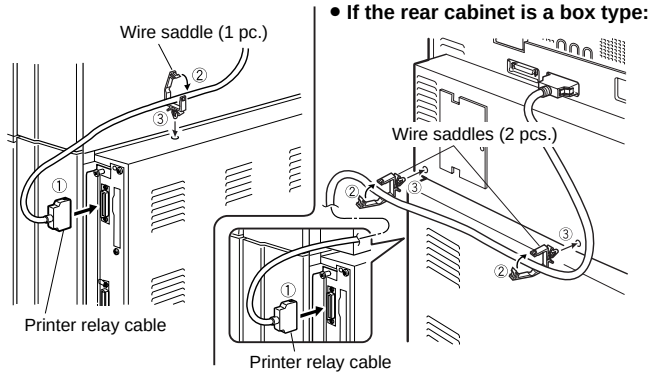

(2) Expansion memory installation

a. Memory expansion in the printer control PWB

Normally there is no need for memory expansion. However, memory expansion will increase the printer performance.

When printing graphics or complex data, memory expansion will increase printing speed.

Memory of 16MB or 32MB can be installed to the two slots. (16MB onboard)

Different capacity of memory can be installed to the two slots.

The total memory after expansion may be 32, 48, 64, or 80MB. After the above procedure, select VM Option menu and set the total memory capacity.

b. ICU PWB memory expansion

The copier ICU PWB requires total memory capacity of 16 (20)MB or more.

Memory of 16MB or 32MB can be installed to the two slots. (4MB onboard)

Different capacity of memory can be installed to the two slots.

B. Stand-alone environment (Printer (parallel) cable connection)

Plug the connector of the Centronics cable (sold separately) into the Centronics port on the printer box base.Plug the other connector into the laser printer port on a personal computer.

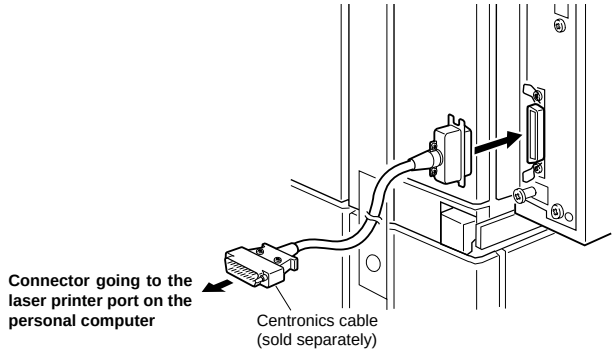

C. Network environment (Network card installation)

1) Insert the network card into the network card slot on the printer control PWB. and fix it with screws.

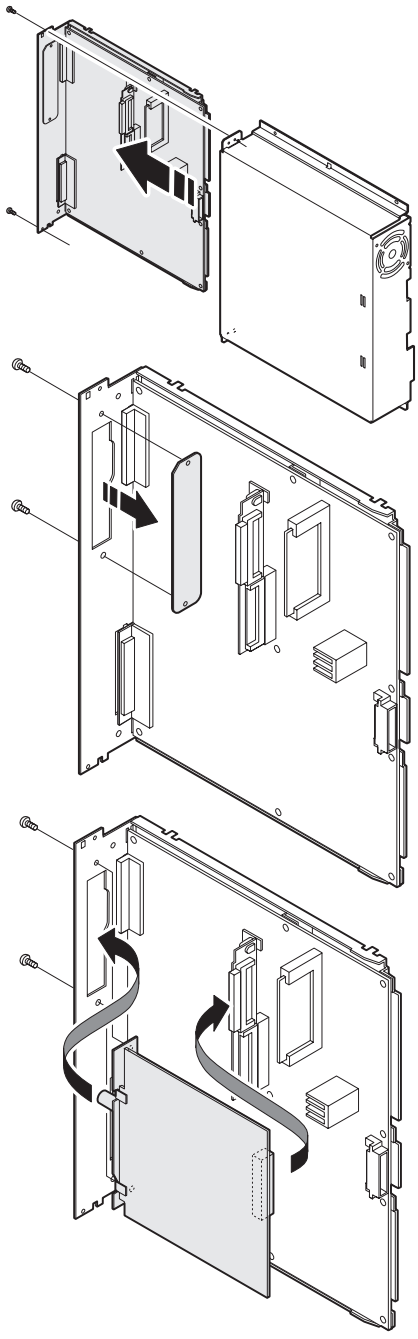

2) Install the printer control PWB to the copier.

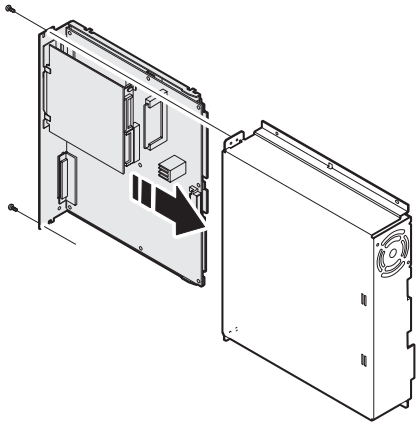

3) Connect the network cable to the network card connector.

4. Setup on the copier side

A. Setup by simulation

Setup the following items. For parallel I/F, setup, if there is no trouble in operations, there is no need to change any settings.

Content	Simulation No.	Set value
System configuration setup	26-44	1
Print counter count mode setup	26-05	
Parallel I/F timing adjustment	67-03	
Parallel I/F select IN signal timing	67-11	

B. Setup by key operator program

Refer to the section of the key operator program and make setting according to the user environment.

5. Software installation and setup

Checking the Hardware and Software Requirements

You will need the following hardware and software in order to install the printer driver.

(Windows)

Computer Type	• IBM PC/AT or compatible computer equipped with a bi-directional parallel interface
Operating System	• Windows 3.1x, Windows 95, Windows 98, Windows 2000, Windows NT 4.0
CPU	• Windows 3.1/Windows 95: 486SX or better • Windows 98: 486DX/66 MHz or better (Pentium or better is recommended.) • Windows NT4.0: 486/25MHz or better
RAM	• Windows 3.1/Windows 95: 8 MB or more (12 MB or more is recommended.) • Windows 98/Windows 2000: 16 MB or more (32 MB or more is recommended.) • Windows NT 4.0: 16 MB or more

(Macintosh)

Operating system	• Mac OS 7.6 to 9.0
CPU	• MC 68040 or PowerPC microprocessor
RAM	• 16 MB or more for PowerPC microprocessor machine • 12 MB or more for MC 68040 machine
Printer driver	• LaserWriter 8 version 8.4.1 or later

To use the printer with a Macintosh computer, an optional network interface card (Print Server Card) is needed. Also the Macintosh computer must be equipped with an Ethernet port. If your computer is not equipped with an Ethernet port, install an Ethernet interface.

6. Setup under network environment

Check the user environment and make setup according to the Operation Manual attached to the network card.

A. Outline of the NW Setup

The NW Setup is a setup tool for using a SHARP printer with a network card installed in a Novell NetWare environment. Registration of printers to a NetWare server and parameter settings for a network card can be performed by using a procedure with wizards.

For using the NW Setup, a Novell Client supplied by Novell must have been installed. Also before starting the NW Setup, you must log in the NetWare server with the 'Administrator' privileges.

B. Checking the Hardware and Software Requirements

To use the NW Setup, the following hardware and software are needed.

NetWare server:	IntranetWare (NetWare 4.x)
NetWare client:	Novell Client 4.5 for Windows NT Novell Client v3.0 for Windows 95/98/2000
Client PC operating system:	Windows 95, Windows 98, Windows 2000, Windows NT 4.0
Printer:	SHARP printer with a Print Server Card (AR-NC3D) installed

7. Web Page Setting

This copier/printer is equipped with web page features that allow some network-related functions such as the network scanner function and the Status & Alert by E-mail function to be set and used with a web browser. (An optional Network Scanner Expansion Kit AR-NS1 is required to use the network scanner function.)

The web page feature includes the following three types.

1. Password Setting

   Setting up the administrator's and user's passwords.

   The administrator of this software can set the passwords (for administrator and user) to authorize the access to the E-mail Setup Web page for the security of the settings on the page. If such a security measure is not required, the Password Setting procedure can be skipped. This will leave Web access settings open to all users.
2. E-mail Setup and Network Scanning Setup

   Configuration of the network scanning system and status/alert by E-mail.
3. Scanning Destination Setup

   Setting the default scanning parameters on the device to send the scanned image or data as Destinations. (An optional Network Scanner Expansion Kit AR-NS1 is required for this setup.)

First, assign an IP address to the copier/printer.

A. Password Setting

The administrator should exclusively do the setting of the password of two levels: User and Admin when setting up network scanning system security. A User password is required to create, change, and delete destinations. An Admin Password lets you access to the same functions as the User password but is also required to set system configuration settings such as:

- Password Setup page
- Setup Status & Alerts by E-mail pages
- E-mail/Network Scanning Setup page

When you first install your network scanning system, both password functions are disabled. To set a User and/or Admin password.

Name	Definition
Enable Password Protection of This Web Site	To enable password protection, check the box and click the 'Submit' button. To disable it, clear the check mark in the box and click the 'Submit' button.
User Access in Destination List	Enter a User password within 10 characters.
Confirm Password	Enter the User password again to confirm it.
Admin Control for E-mail/Scanning	Enter an Admin password within 10 characters.
Confirm Password	Enter the Admin password again to confirm it.

B. E-mail Setup and Network Scanning Setup

In the "Status/Alert by E-mail" function, SMTP (Simple Mail Transport Protocol) protocol is used to send the e-mails. This section describes how to set up the basic status of the e-mail sending including the definition of the file names for the image data to be attached and so on. Such settings must be effected by the system administrator who has the special network related backgrounds.

(1) E-mail Setup

Item	Description
Name	Enter a unique name for the machine within 50 characters.
Machine Code	This is not used. This field can be used to input some machine related information. Some dealers may use this field to identify the machine.
Machine Location	Enter a unique entry for the machine location within 100 characters.
Primary E-mail Server	Enter an IP address for the primary e-mail server or a host name.
Secondary E-mail Server	Enter an IP address for the secondary e-mail server or a host name. No need to enter if secondary e-mail server is not set up.
E-mail Time Out	Enter a time out period, from 0 to 60 seconds, that the system will wait for as it attempts to connect to the primary server. The default is 20 seconds. If no connection is made, the system will then look for the secondary server if it has been set up. If not, the system will stop attempting to connect.
Reply Address	Enter an e-mail address to which the machine returns an unsuccessful delivery message when the distribution has failed. Only 1 e-mail address can be entered.
Time Zone	Select the time zone of the place to use this Network Scanning System. A specific time zone is set after the selection.

[4] SETTING AND ADJUSTMENT

1. Configuration setting

(Accessing the Printer Configuration Menu)

To access the printer configuration menu, follow the steps below.

1. Press the PRINT key to select the printer mode. Make sure the PRINT indicator lights up and the basic screen is displayed on the touch panel.
2. Press the "ONLINE" key on the touch panel to select the OFFLINE mode and press the "MENU" key.

The printer configuration menu screen will appear on the touch panel. The main menu items are: PRINTER SETTINGS, INTERFACE SETTINGS, NETWORK SETTINGS, PRINT TEST PAGE, and INITIALIZE AND/OR STORE SETTINGS. Use the UP/DOWN arrow (▲, ▼) keys to scroll the screen.

NOTES: If any printing data remains in the memory, the printer configuration menu will not appear. In this case, access the printer configuration menu after printing is complete or press the CLEAR (©) key to cancel printing and then continue to access the menu.
If conflicting settings are made with the printer driver and the configuration menu, the printer driver will have priority.

(Using the Printer Configuration Menu)

Use steps 1 and 2 above to access the printer configuration menu.

3. Select the desired main menu item on the touch panel.
4. If a sub-menu appears, select the desired function. To scroll the touch panel screen, use the UP/DOWN arrow (▲, ▼) keys.
5. Turn the setting of a function on or off by pressing its corresponding check box in front of the function name. For functions without a check box, adjust the settings on each function setting screen.
6. To exit the configuration menu, return to the main menu by pressing the "OK" key and then press the "ONLINE/OFFLINE" key to return to the online mode.
   If a test print has been selected, once complete, the printer will automatically return to the online mode.

Printer Configuration Menus

A flow chart of the printer configuration menu is shown. The menu structure changes depending on whether a network interface card is present in the copier/printer or not. The menus inside the gray area are for a copier/printer with a network interface card (Print Server Card) installed.

NOTE: Depending on the particular printer, some functions of the printer configuration menu cannot be set, for example, smoothing and toner save mode.

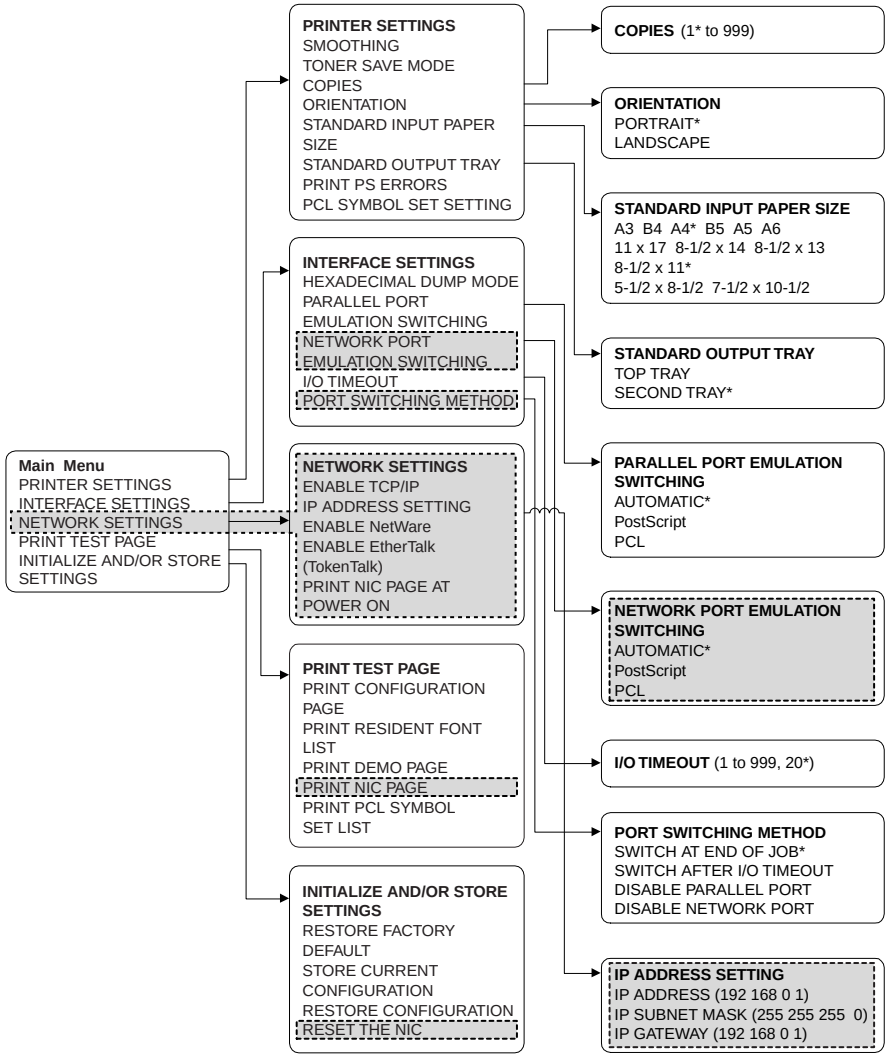

NOTES: The menus inside the gray area are for a printer with the network interface card option installed.

- * Denotes the default setting.
- The default setting of STANDARD INPUT PAPER SIZE depends on the countries or regions.
- The default setting of STANDARD OUTPUT TRAY depends on installation of optional finisher.
- The values indicated with IP ADDRESS are examples.

A. Printer Settings

Use the printer settings when printing without the proper printer driver installed (for example, printing from an MS-DOS application, printing from a computer without the printer driver installed, etc.). This menu allows detailed print conditions to be set.

SMOOTHING	Enables or disables the smoothing function. This setting is enabled in the default setting.
TONER SAVE MODE	Sets or cancels the toner save mode. The toner save mode reduces toner consumption. Printed images will be lighter but still adequate for general use. This setting is disabled in the default setting.
COPIES	Number of copies to print can be set. 1 to 999 can be entered.
ORIENTATION	Selects the default page orientation: portrait or landscape.
STANDARD INPUT PAPER SIZE	Specifies a default input paper size. One of the following sizes can be selected: A3, B4, A4, B5, A5, A6, 11 x 17, 8-1/2 x 14, 8-1/2 x 13, 8-1/2 x 11, 5-1/2 x 8-1/2, 7-1/4 x 10-1/2
STANDARD OUTPUT TRAY	Specifies a default output tray. Top tray, second tray or offset tray can be selected. The offset tray cannot be selected when no optional finisher is installed. The second tray cannot be selected when an optional 2-tray finisher is installed. Face up or face down can also be selected for certain trays in this menu.
PRINT PS ERRORS	Determines whether or not PostScript® error information will be printed. This setting is disabled in the default setting.
PCL SYMBOL SET SETTING	Specifies a PCL symbol set. (The symbol set is used to assign a part of character codes to characters of a country.) The factory default setting is 1 (Roman-8).

No.	Symbol set	No.	Symbol set
1	Roman-8	19	Math-8
2	ISO 8859-1 Latin 1	20	PS Math
3	PC-8	21	Pi Font
4	PC-8 Danish/Norwegian	22	ISO 8859-2 Latin 2
5	PC-850	23	ISO 8859-9 Latin 5
6	ISO 6 ASCII	24	ISO 8859-10 Latin 6
7	Legal	25	PC-852
8	ISO 21 German	26	PC-775
9	ISO 17 Spanish	27	PC-Turkish
10	ISO 69 French	28	MC Text
11	ISO 15 Italian	29	Windows 3.1 Latin 1
12	ISO 60 Norwegian v1	30	Windows 3.1 Latin 2
13	ISO 4 United Kingdom	31	Windows 3.1 Latin 5
14	ISO 11 Swedish: names	32	Windows Baltic (not 3.1)
15	PC-1004 (OS/2)	33	Windows 3.0 Latin 1
16	DeskTop	34	Symbol
17	PS Text	35	Wingdings
18	Microsoft Publishing	—	—

B. Interface Settings

Use the interface settings to configure the printer's parallel and network interfaces.

HEXADECIMAL DUMP MODE	If this function is set, the print job will be output in the hex dump format. This setting is disabled in the default setting.
PARALLEL PORT EMULATION SWITCHING	Specifies a printer language to emulate for printing when the printer is connected to the computer through a parallel port. "AUTO"*, "PostScript" or "PCL" can be set.
NETWORK PORT EMULATION SWITCHING	Specifies a printer language to emulate for printing when the printer is connected to the computer through network. "AUTO"*, "PostScript" or "PCL" can be set.
I/O TIMEOUT	Use this function to set the amount of time to wait after end of data stream before ending print job. This time can be entered using the **UP/DOWN** arrow (▲, ▼) keys. The allowable range of the time is 1 to 999 seconds.
PORT SWITCHING METHOD	Determines which switching method to use for the interface port. "SWITCH AT END OF JOB", "SWITCH AFTER I/O TIMEOUT", "DISABLE PARALLEL PORT" or "DISABLE NETWORK PORT" can be selected.

* If "AUTO" is set, the printer language will switch automatically in accordance with the data from the computer. It is recommended to set "AUTO" unless an error due to this setting occurs frequently.

C. Network Settings

Use the network settings when using this printer as a network printer. If an optional network interface card (Print Server Card) is not installed, these settings will not appear on the touch panel.

ENABLE TCP/IP	Enables or disables the TCP/IP protocol. This setting is enabled in the default setting. To use the printer with the TCP/IP protocol, set the IP address in the next function.
IP ADDRESS SETTING	IP ADDRESS: Manually set the printer's IP address. Note that no number can exceed 254. First digit of the number cannot be 0. Each item can be selected directly with the touch key. The value can be input using the 10-key pad.
	IP SUBNET MASK: Manually set the printer's IP subnet mask. Note that no number can exceed 255. First digit of the number cannot be 0. Each item can be selected directly with the touch key. The value can be input using the 10-key pad.
	IP GATEWAY: Manually set the printer's IP gateway. Note that no number can exceed 254. First digit of the number cannot be 0. Each item can be selected directly with the touch key. The value can be input using the 10-key pad.
ENABLE NetWare	Enables or disables the NetWare protocol. This setting is enabled in the default setting.
ENABLE EtherTalk (TokenTalk)	Enables or disables the EtherTalk (TokenTalk if TokenRing network is connected) protocol. This setting is enabled in the default setting.
PRINT NIC PAGE AT POWER ON	If this function is set, the printer will print the NIC (Network Interface Card) configuration page when power is turned on. This setting is enabled in the default setting.

NOTE: When the enable or disable setting of protocols (ENABLE TCP/IP, ENABLE NetWare, and ENABLE EtherTalk) is changed, the new setting will be effective after resetting the printer. For resetting, follow the message by pressing "OK", turning the printer off and then back on after waiting a few seconds.

D. Print Test Page

Printing a test page verifies that the printer operates properly. Also you can check the configuration settings, built-in fonts etc. When printing is complete, the printer will exit the printer configuration menu and return to online mode.

PRINT CONFIGURATION PAGE	If this key is pressed, the printer will return to the online mode and print the configuration list.
PRINT RESIDENT FONT LIST	If this key is pressed, the printer will return to the online mode and print the resident font list.
PRINT DEMO PAGE	If this key is pressed, the printer will return to the online mode and print a demonstration page.
PRINT NIC PAGE	If this key is pressed, the printer will return to the online mode and print the NIC (Network Interface Card) configuration page. If an optional network interface card (Print Server Card) is not installed, this function will not appear on the touch panel.
PRINT PCL SYMBOL SET LIST	If this key is pressed, the printer will return to the online mode and print the PCL symbol set list.

E. Initialize and/or Store Settings

Use these functions to initialize or store printer settings.

RESTORE FACTORY DEFAULTS	When this key is pressed, a confirmation window will appear. If the "**YES**" key is pressed, all the printer configuration settings will return to the factory default settings.
STORE CURRENT CONFIGURATION	When this key is pressed, a confirmation window will appear. If the "**YES**" key is pressed, the current printer configuration settings will be stored in the printer's nonvolatile memory.
RESTORE CONFIGURATION	When this key is pressed, a confirmation window will appear. If the "**YES**" key is pressed, the printer configuration settings that have been stored in the printer's nonvolatile memory with the "STORE CURRENT CONFIGURATION" function will be recalled.
RESET THE NIC	When this key is pressed, a confirmation window will appear. If the "**YES**" key is pressed, the settings of the optional network interface card will return to the factory default settings.

NOTES: If configuration settings are protected using key operator programs (Prohibit Changes to Printer Settings and Prohibit Changes to Interface Settings), the settings cannot return to the factory default setting and stored settings cannot be recalled.

Use the key operator programs to cancel protection mode.

If the setting of functions of enabling protocols (ENABLE TCP/IP, ENABLE NetWare, and ENABLE EtherTalk) is changed by using the function "RESTORE FACTORY DEFAULTS" or "RESTORE CONFIGURATION", the new setting will be effective after resetting the printer. To reset the printer, turn off the printer and then turn it on after a few seconds.

The "Restore Factory Defaults" setting does not restore network settings. To return the network settings to the factory default settings, use the "RESET THE NIC" function.

2. Key operator programs

(1) List

PROGRAM NAME	FUNCTION
Printer Exposure Level	Lightens or darkens printouts.
Memory Reserved for Printer	Specifies percentage of document memory allocated to storage of printer jobs. (AR-250 (1GB hard disk model) only)
Output Method When Memory Is Full	Specifies whether one set or multiple sets will be printed when the printer memory becomes full.
Set the Number of Confidential Print Jobs to Be Stored	Specifies the maximum number of confidential print jobs that can be stored in the printer and the maximum number of pages in a job.
Enable Bypass-Tray Size Detection	Enables or disables paper size detection for the bypass tray.
Give Priority to Print Speed in Staple Mode	Specifies an image processing method for printing with stapling. (AR-505/507 only)
Prohibit Notice Page Printing	Specifies whether a notice page will be printed when the printer memory becomes full and divided printing is performed.
Prohibit Rotated Output	Enables/disables rotation of print image for printing onto A4R or 8-1/2" x 11"R paper.
Prohibit Bypass-Tray Selection	Enables/disables bypass tray selection in the 'Auto Tray Switching' mode.
Prohibit Auto Tray Switching	Enables/disables automatic switching between paper trays during printing when paper runs out.
Prohibit Test Page Printing	Enables/disables test page printing from the printer configuration menu.
Prohibit Changes to Printer Settings	Prohibits modification of basic printer settings in the printer configuration menu.
Prohibit Changes to Interface Settings	Prohibits modification of interface settings in the printer configuration menu.
Prohibit Changes to Network Settings	Prohibits modification of network settings in the printer configuration menu.
Record Copy and Print per Account	Enables or disables the printer auditing mode, which controls access to printer.

3. Hardware setup and adjustments

A. Flash Memory write protect setting

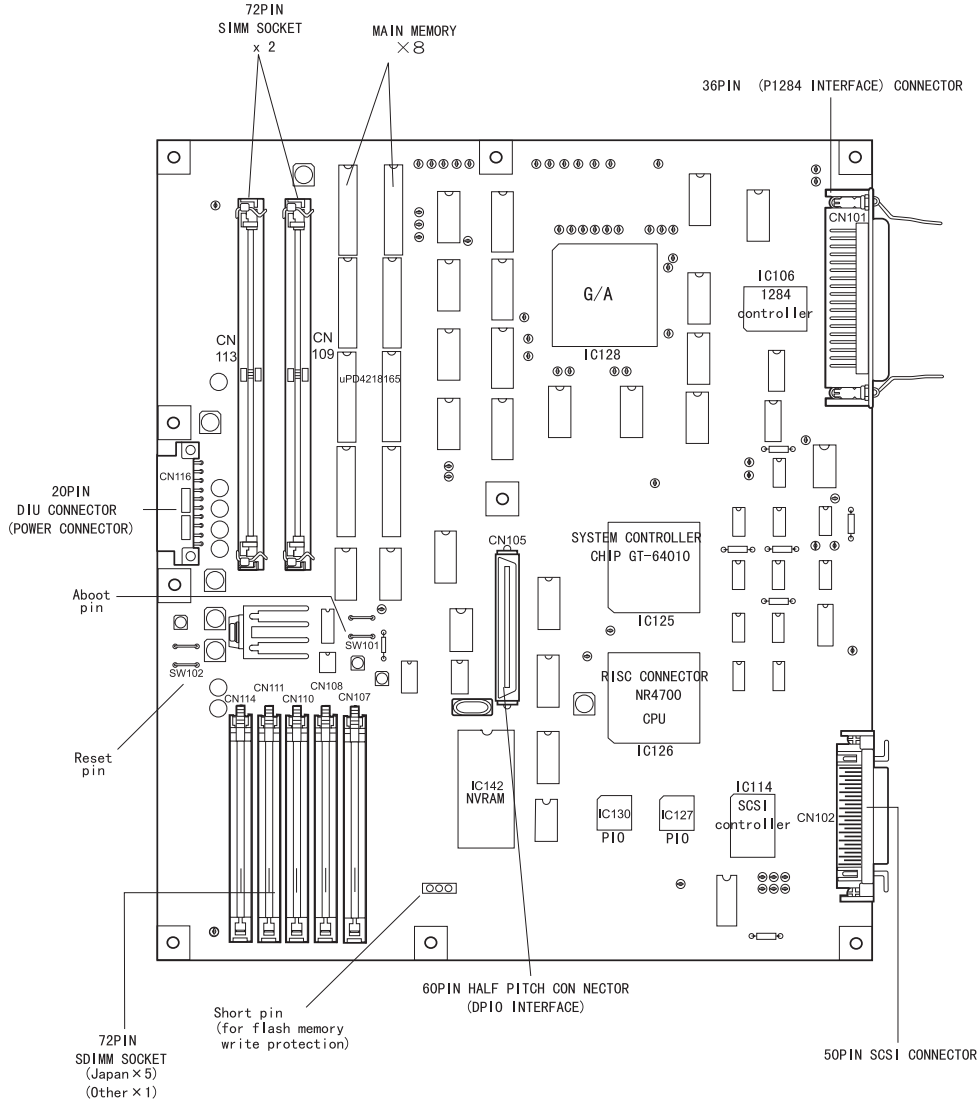

Flash memory write protect setup (JP109)

Used to setup write protect YES/NO of flash memory.

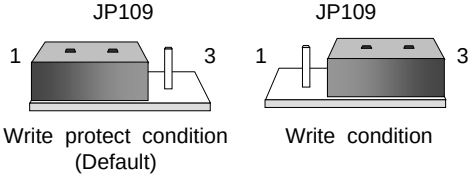

When making version up of the flash memory or when rewriting the flash memory, short pins 2-3. In normal cases, short pins 1-2 (write protect).

When shipping, the DIP switch is set to the following value.

JP109	1-2	Flash memory write protect

B. Laser power setup

Enter SIM 61-4 and set the setup value to 16 (default).

If set to another value, normal print density may not be obtained.

C. Centro interface adjustment

(1) Centro interface timing adjustment

Enter SIM 67-3 and set the ACK signal width.

If communication between PC and the copier is not normally performed with the set value st to 10 (default), check the environment of PC and change the set value.

Adjustment range: 0 ~ 255

(2) SELECT IN signal setup

Enter SIM 67-11 and set SELECT IN signal YES/NO.

The relationship between the set value (0 or 1) and SELECT IN signal is as follows:

Set value	SELECT IN signal
0	YES
1	NO

If communication between PC and the copier is nor performed normally, check the environment of PC and change the set value.

D. NVRAM clear

Use SIM 67-17.

This is used to clear various setup data relating to the printer operations stored in NVRAM on the printer control PWB.

Execute this procedure to set all the setup data to default.

E. Network card check

After installing the network card, execute SIM 67-16, and the operation of the network card is displayed as NG or OK.

[5] Configuration Report and Test Page

1. Samples

SHARP

Printer Configuration Page

HARDWARE STATUS

Machine Information
Resolution: 600dpi
Language: English

Hardware Specs
Base Memory: 16MB
Optional Memory: 32MB
Total Memory: 48MB
Copier HDD: 4GB

Firmware Version
PRT: 4.28
BOOT: 2.04
ICU: M1.20

Installed Device
Duplex Module: Yes
Output Device: 1 Exit Tray
Paper Input Trays: 2 Trays
Large Capacity Tray: No
Interface Board: Ethernet

Available Paper Size
Tray 1: Letter (8½x11)
Tray 2: A4
Bypass-Tray: A3

SOFTWARE STATUS

PostScript Emulation
Job Timeout: 0sec.
Manual Feed Timeout: 60sec.
Wait Timeout: 300sec.

PCL Emulation
Font Source: Resident
Font Number: 0
Font: Courier
Pitch Size: 10.00
Point Size: 12.00

Network Information
NIC Serial Number: 741869
NIC Firmware Version: 5.55
NetWare Print Server Name: SHA_741869
EtherTalk Printer Name: SHA_741869
EtherTalk Zone: *

KEY MENU STATUS

Printer Key Operator Settings
Printer Exposure Level: Darkest
Output Method When Memory is Full: 1 Set
Set The Number Of Confidential Print Jobs To Be Stored: 16
Enable Bypass-Tray Size Detection: Yes
Prohibit Notice Page Printing: No
Prohibit Rotated Output: No
Prohibit Bypass-Tray Selection: No
Prohibit Auto Tray Switching: No
Prohibit Test Page Printing: No
Prohibit Changes to Printer Settings: No
Prohibit Changes to Interface Settings: No
Prohibit Changes to Network Settings: No
Record Copy And Print Per Account: No

Network Settings
Enable TCP/IP: Yes
IP Address: 10.36.152.165
IP Subnet Mask: 255.255.255.0
IP Gateway: 10.36.152.1
Enable NetWare: No
Enable EtherTalk: No
Print NIC Page at Power-On: No

Printer Settings
Smoothing: Yes
Toner Save Mode: No
Copies: 1
Orientation: Portrait
Standard Input Paper Size: A4
Standard Output Tray: Top Tray
Print PS Errors: No
PCL Symbol Set Setting: Roman-8

Interface Settings
Hexadecimal Dump Mode: No
Parallel Port Emulation Switching: Automatic
Network Port Emulation Switching: Automatic
I/O Timeout: 20sec.
Port Switching Method: Switch at End of Job

PostScript is a trademark of Adobe Systems Incorporated, that may be registered in certain jurisdictions. PCL is a registered trademark of Hewlett-Packard Company. NetWare is a registered trademark of Novell, Inc. All other trademarks and copyrights are the property of their respective owners.

2. Description of Each contents

This section defines the meaning of each item. These items are basically used in configuration pages, but some contents are not used depending on language.

A. Hardware Status

Machine Information

a. Resolution

Value: 600 dpi
Example: 600 dpi
Default: 600 dpi
Description: It is always 600 dpi.

b. Language

Value: (English) | Deutsch (German) | Francais (French) | Italiano (Italian) | Nederlands (Dutch) | Espanol (Spanish) | Svenska (Swedish)
Example: English
Default: Depends on copier language
Description: AR-PB2 includes seven language messages originally. AR-PB2 decides the display language depending on the language code sent from MAIN (MAIN sends the language code based on its language ROM). This value indicates the language that sent by MAIN to PRT.

Hardware Specs

a. Base Memory

Value: 16 MB

Example: 16 MB

Default: 16 MB

Description: It indicates base memory quantity of the printer board. Basically, this is fixed at 16 MB and it cannot be changed.

b. Optional Memory

Value: (0|16|32|48|64) MB

Example: 0MB

Default: 0MB

Description: It indicates the printer board's optional memory quantity. The customer (serviceman) could extend the memory by attaching 72pin-SIMM. 0MB means optional memory is not attached. 16MB or 32MB SIMM can be used to this purpose.

c. Total Memory

Value: (16|32|48|64|80) MB

Example: 16MB

Default: 16MB

Description: It indicates the printer board's total memory quantity. In other words, it is summation of Base Memory and Option Memory.

d. Copier HDD

Value: 4GB

Version Information

a. PRT

Value: #.##

Example: 2.00

Default: Depends on printer firmware version

Description: This number should be same as the PRT-PRG ROM version number seen on serviceman simulation 22-5.

b. BOOT

Value: #.##

Example: 2.00

Default: Depends on printer firmware version

c. ICU

Value: #.##

Example: 2.00

Default: Depends on printer firmware version

Description: This number should be same as the ICU ROM version number seen on serviceman simulation 22-5.

Installed Device

a. Duplex Module

Value: (Yes | No)

Example: Yes

Default: Depends on the Machine configuration

Description: It indicates that duplex unit is attached or not.It depends on hardware configuration.

b. Output Device

Value: (Standard 1 Tray | Standard 2 Trays | 3 Tray Finisher|2 Tray Finisher)

Example: 3 Tray Finisher

Default: Depends on the Machine configuration

Description: It indicates attached output device.. It depends on hardware configuration.

c. Paper Input Trays

Value: (2 trays | 3 trays | 4 trays)

Example: 2 trays

Default: Depends on the Machine configuration

Description: It indicates the number of standard input trays.It depends on hardware configuration.

d. Large Capacity Tray

Value: (Yes | No)

Example: Installed

Default: Depends on the Machine configuration

Description: It indicates that large capacity paper input tray(Large Capacity Tray) is attached or not. It depends on hardware configuration.

e. Interface Board

Value: (None | Ethernet | TokenRing)

Example: Ethernet

Default: Depends on the Machine configuration

Description: It indicates the kind of installed network card option to the slot. 10Base-T/2 and 10/100Base-T are not identified. Those two will be reported as Ethernet.
TokenRing would not be supported for AR-PB1 (AR-PB2) for Japan domestic.

Available Paper Size

Appearance on Configuration Page	Description
Letter (81/2x11)	Letter / Long Edge Feed
Letter (81/2x11R)	Letter / Short Edge Feed
Legal (81/2x14)	Legal / Short Edge Feed
Ledger (11x17)	Ledger / Short Edge Feed
Executive (7 1/4x101/2)	Executive / Short Edge Feed
Invoice (5 1/2x81/2)	Invoice / Long Edge Feed
Foolscap (81/2x13)	Foolscap / Short Edge Feed1
A4	A4 / Long Edge Feed
A4R	A4 / Short Edge Feed
B5	B5 / Long Edge Feed
B5R	B5 / Short Edge Feed
B4	B4 / Short Edge Feed
A3	A3 / Short Edge Feed
A5	A5 / Long Edge Feed
A6	A6 / Short Edge Feed
Japanese Postcard	Japanese Postcard / Short Edge Feed
(Unknown)	Other size (EXTRA)
(No Paper)	No paper available on this tray.
(No Tray)	There is a problem with this tray.
(Tray Open)	This tray is opened (except Bypass-Tray) or Tray is lifting up.

a. Tray 1 / Tray 2 / Tray 3 / Tray 4

Value: [Appropriate Paper Size]

Example: Letter (81/2x11)

Default: Depends on paper tray configuration.

Description: It indicates paper size configuration of Tray 1 /2 / 3 / 4 / 5. It depends on hardware configuration, not software condition.
(Unknown) means paper size cannot be identified. (Tray configuration is "EXTRA".)
This line is not printed for unavailable tray.

b. Large Capacity Tray

Value: [Appropriate Paper Size]

Example: Letter (81/2x11)

Default: Depends on paper tray configuration.

Description: It indicates paper size configuration of Large Capacity Tray. It depends on hardware configuration, not software condition. When tray is opened, nothing is printed at here.
This line is not printed when Large Capacity Tray is not attached.

c. Bypass-Tray

Value: [Appropriate Paper Size]

Example: Letter (81/2x11)

Default: Depends on the paper size set on Bypass Tray.

Description: It indicates paper size of set on Bypass Tray. It depends on detection of Bypass Tray paper size. (Unknown) means paper size cannot be detected.

B. Software Information

PostScript Emulation

a. Job Time-out

Value: # (variable length digit)

Example: 0

Default: 0

Description: This value indicates PostScript Job Time-out length (seconds). If this time will pass from receiving the job then PostScript interpreter will give up to print the job and cancel.

b. Manual Feed Time-out

Value: # (variable length digit)

Example: 0

Default: 0

Description: This value indicates PostScript Manual Feed Time-out length (seconds). If the print data break off during printing and this time will pass, then PostScript interpreter will cancel the print job. 0 means never time out.

c. Wait Time-out

Value: # (variable length digit)

Example: 300

Default: 300

Description: This value indicates PostScript Wait Time-out length (seconds). If the print data break off during printing and this time will pass, then PostScript interpreter will cancel the print job. 0 means never time out.

PCL5e Emulation

This section tells PCL5e information. This section would not appear on AR-PB1 (Siam) for Japan domestic.

a. Font Source

Value: (Resident | Download)

Example: Resident

Default: Resident

Description: Current font source to print characters in PCL mode.

b. Font Number

Value: 0 to 45

Example: 0

Default: 0

Description: This is the current default font number used for plain PCL job stream.

c. Font

Value: (PCL font name)

Example: Courier

Default: Courier

Description: Current default font for PCL printing.

d. Pitch Size

Value: # (variable length digit)

Example: 0.44 to 99.99 in 0.01 steps

Default: 10.00

Description: This is the current default pitch size for plain PCL job stream.

e. Point Size

Value: # (variable length digit)

Example: 4.00 to 999.75 in 0.25 steps

Default: 12.00

Description: This is the current default point size for plain PCL job stream.

f. Symbol Set

Value: (PCL symbol set name)

Example: Roman-8

Default: Roman-8

Description: This is the current default symbol set for plain PCL job stream.

Network Information

a. NIC Serial Number

Value: ######

Example: 123456

Default: Depends on NIC.

Description: It indicates the NIC's serial number. This value is written in NIC's ROM (or flush ROM).

b. NIC Firmware Version

Value: ######

Example: 123456

Default: Depends on NIC.

Description: It indicates the NIC's serial number. This value is written in NIC's ROM (or flush ROM).

c. NetWare Print Server Name

Value: [User Definable]

Example: SHARP_990792

Default: SHARP_[NIC card serial number]

Description: This value must reflect the printer name for IPX/SPX (NetWare).

[6] FIRMWARE VERSION UP

1. Printer controll PWB

A. Cases where flash memory rewriting is required

In the following cases, the program in the printer control PWB flash memory must be rewritten.

1) When a bug or other error is found
2) Data stored in the flash memory is destroyed or deleted.
3) When the flash memory is replaced.

B. Necessary tools

1) Computer (PC)
2) Parallel cable
3) Program data file (xxx.hex)

C. Procedure

1) Print the setup list to check the firmware version.

   Use the operation panel of the copier to perform the following procedure.

   Offline → Environment setup → Test page print → Test page output
2) Turn off the power and cancel write protect of the flash memory on the printer control PWB.

   Copier power OFF → Remove the printer control PWB. → Switch the connection of jumper JP109 on the printer control PWB from 1-2 to 2-3. → Install the printer control PWB.
3) Connect the PC and the copier with the parallel cable.
4) Turn on the power
5) Execute SIM 67-14.
6) Download the program file.

(Note) Never turn off the power during download.
Set the PC to DOS mode → Check that the display shows READY. → Then type > COPY ␣ xxx.hex ␣ LPT1:
and press the enter key.
(␣ :space)

The display is changed as shown below and the final display shows OL. Then the simulation is completed.
READY → RECEIVE → ERASE → BLANK → WRITE → VERIFY → OK

(Note) In case of an error, "NG" is displayed.
IN that case, press the interruption key to exit from SIM 67-12 menu.
If the PC still sends data, stop data sending.
Check the PC and the copier for any abnormality, and perform the above procedure again. It is requred 15 ~ 30 min. (Due to PC performance)

7) Print the setup list and check the firmware version.
8) Turn off the power and write-protect the flash memory on the printer control PWB.

   Copier power OFF → Remove the printer control PWB. → Switch the connection of jumper JP109 on the printer control PWB from 1-2 to 2-3. → Install the printer control PWB.
9) Perform printing on the PC side and check that printing is performed normally.

2. Network card

When using the network card AR-NC3D with AR-PB2A, if the firmware version of the AR-NC3D is 5.46 or earlier, upgrade is needed.

This upgrade must be carried out for adapting the card to the additional features of AR-PB2A.

Check the version number in accordance with step 1 and carry out the upgrade in accordance with step 2 if needed.

A. Check the version number of the network card.

Select the menu by pressing "MENU" and "PRINT TEST PAGE" on the operation panel of the copier and execute "PRINT CONFIGURATION PAGE".

The setting list will be printed. Check "NIC Firmware Version:" in "Network Information".

If the version number is 5.46 or less, upgrade is needed.

B. Upgrade of network card The upgrade tool is included in the PRINTER UTILITIES CD-ROM.

Since this file is used for service, it is set as a hidden file. Check the file using the following procedure.

1) When checking on a Windows PC, select "Show all files" from the "View" and "Folder Options" menus.
2) The tool is included in the "\NC3D" folder. Carry out the upgrade of the network card in accordance with the Network Card Upgrade Utility Manual ("FTPDLMAN.TXT").

[7] FUNCTION AND OPERATION

1. Multi Function

Multiple Functions

Arbitration of contention among printing, copying and faxing is controlled by the copier. The print controller only sends the print request to the copier. The copier judges whether the requested print job is immediately performed or not by checking the current status of the copier. The printer controller does not control contention caused by the status of the copier.

(1) Printer/Copier

From Printer Job to Copier Job

New Job Current Job	Panel operation (Copier)	Copy scan (scanning an original to be copied) (Copier)	Memory copy (saving copy data into memory) (Copier)	Copy Printing (Copier)
Receiving Print Data (PRT)	Enables copy panel operation without interruption. Continually receiving print data.	Enables copy scanning without interruption. Continually receiving print data.	Enables saving of copy data into memory without interruption. Continually receiving print data.	Enables copy printing without interruption. Continually receiving print data.
Rasterizing Print Data (PRT)	Enables panel operation without interruption. Continually rasterizing print data.	Enables copy scanning without interruption. Continually rasterizing print data.	Enables saving of copy data into memory without interruption. Continually rasterizing print data.	Enables copy printing without interruption. Continually rasterizing print data.
Transferring Print Image (PRT-Copier)	Enables copy panel operation without interruption while the first page of data is being transferred. Allows interrupt copy panel operation while print data of the second or successive pages is being transferred.	Enables scanning without interruption while the first page of data is being transferred. Allows interrupt copying (copy scan) while print data of the second or successive pages is being transferred. In either case, clears transferred image data and requests that the image data be transferred again. Enables saving of copy data into memory without interruption while the first page of data is being transferred. Allows interruption of saving of copy data into memory while print data of the second or successive pages is being transferred. In either case, clears transferred image data and requests that the image data be transferred again.	Enables copy printing without interruption while the first page of data is being transferred. Allows interrupt copy printing while print data of the second or successive pages is being transferred.	In either case, clears transferred image data and requests that the image data be transferred again.
Printing Images (Copier)	Enables copy panel operation without interruption. Continually transferring the print image.	After the current page is printed out, allows interruption of scanning.	After the current page is printed out, allows interruption of saving of copy data into memory.	After the current page is printed out, allows interruption of copy printing.

From Copier Job to Printer Job

New Job Current Job	Receiving Print Data (PRT)	Rasterizing Print Data (PRT)	Transferring Print Image (PRT-Copier)	Printing Images (Copier)
Copy panel operation (Copier)	Continually receiving print data until receiving buffer becomes full.	Continually rasterizing print data until image buffer becomes full.	Disables print image transfer.	Disables print image printing.
Copy scan (scanning an original to be copied) (Copier)	Continually receiving print data until receiving buffer becomes full.	Continually rasterizing print data until image buffer becomes full.	Disables print image transfer.	Disables print image printing.
Memory copy (saving copy data into memory) (Copier)	Continually receiving print data until receiving buffer becomes full.	Continually rasterizing print data until image buffer becomes full.	Disables print image transfer.	Disables print image printing.
Copy Printing (Copier)	Continually receiving print data until receiving buffer becomes full.	Continually rasterizing print data until image buffer becomes full.	Disables print image transfer.	Disables print image printing.

2. Printer Operation / Message Display

State	Display	JOB Cancel/(Clear) Paper Selection	Online LED	Data LED
During initializing the printer board	<Displayed on dialog window> INITIALIZING. PLEASE WAIT.	Disabled	Off	Off
From the end of initialization to the end of warm-up.	WARMING UP. PLEASE WAIT	Disabled	Off	Off / On
During the warm-up and waiting for starting a print job with the data receiving /processing completed	PLEASE WAIT.	Disabled	On	On
During the idle (Online with no data being received / printed)	READY TO PRINT.)	Disabled	On	Off
During receiving the data During processing the data During transferring images to ERDH	PROCESSING PRINT DATA.	Disabled	On	Blink
During the output of print (during printing the data stored in ERDH)	PRINTING IN PROGRESS.	Disabled	On	Blink
During suspending the print (from when the print starts to be suspended by user's instruction during printing and to when the print job can be actually stopped.	<Displayed on a dialog window> PRINTING IN PROGRESS. PLEASE WAIT.	Disabled	Blink	Blink
While the print is suspended by user. (the data is held)	OFFLINE. TO CLEAR DATA, PRESS [C].	Enabled	Off	On
While the print data is being cleared. (Job Cancel)	PLEASE WAIT. DATA IS BEING CLEARED.	Enabled	Off	On
Offline (The state in which no data is being received and printed, and the user instruction causes Offline.)	OFFLINE.	Disabled	Off	Off
When there is no paper in Bypass Tray during suspending a job with Bypass Tray (manual) selected. (The data is held.)	ADD ******** PAPER INTO BYPASS-TRAY. (When supplying paper as directed, the print will start in three seconds. However, since the size detection is not performed, the paper sizes other than selected one will start to be printed.)	Enabled	Off	On
When there is paper in Bypass Tray during suspending a job with Bypass Tray (manual) selected. (The data is held.)	CHANGE BYPASS-TRAY PAPER TO ********. (When supplying paper as directed, the print will start in three seconds. Even if the paper in bypass tray continues to be used , the paper needs to be reset by loading it again. However, since the size detection is not performed, the paper sizes other than selected one will start to be printed.)	Enabled	Off	On
When there is no paper in Bypass Tray selected at the start of printing the data, or when the print is suspended due to paper-out. (The data is held.)	ADD ******** PAPER INTO BYPASS-TRAY. (When supplying paper as directed, the print will automatically restart in three seconds.)	Enabled	Off	On
When there is no paper in the selected tray at the start of printing the data, or when the print is suspended due to paper-out. (The data is held.)	OPEN * TRAY AND ADD PAPER. (When supplying paper as directed, the print will automatically restart after the lift-up operation in the tray.)	Enabled	Off	On
When Staple Unit is not installed properly (the data is held)	CHECK STAPLER POSITION OR STAPLE JAM. (When checking and setting properly as directed, the print will automatically restart.)	Enabled	Off	On
When a stapler is empty (AR-FN1) (The data is held.)	SLIDE THE FINISHER AWAY FROM THE COPIER AND ADD STAPLES. (when checking and setting properly as directed, the print will automatically restart.)	Enabled	Off	On
When a stapler is empty (AR-FN2) (The data is held)	ADD STAPLES. (When checking and setting properly as directed, the print will automatically restart.)	Enabled	Off	On
During suspending the print due to some errors (Jam/Toner supply) (The data is held)	<CONFORM TO COPIER OPERATION SPECIFICATION.> (Print will start just as the trouble is removed.)	Disabled	Off	On

3. Emulation Switch

Emulation setting can be switched between automatic emulation sensing (switching) and fixed emulation modes as shown below.

AR-PB2
Automatic (PCL ↔ PS) PCL (fixed) / PostScript (fixed)

Emulation switching is performed in the following manner.

PJL Command for Specifying an Emulation	Specified Emulation	Emulation Setting		
		Automatic		Fixed
		Automatic Sensing		
No		OK	Uses the emulation automatically selected.	Uses a default emulation.
		NG	Uses PCL	
Yes	Yes	Uses the emulation specified.		Uses the emulation specified.
	No	Uses PCL		Uses a default emulation.

In the automatic emulation sensing mode, for print data without the PJL command, the emulation is automatically switched either to PostScript, to PCL5e based on data sensed. In other words, automatic emulation sensing (switching) is available only between PostScript and PCL5e. For print data with the PJL command, the emulation is automatically switched to the specified one with out sensing the data. When print data without the PJL command fails to be sensed, or when the print data is given the PJL command but the specified emulation is not present, the data is handled in the PCL emulation.

In the fixed emulation mode, for print data without the PJL command, the fixed emulation is used to handle the print data.Print data with the PJL command is switched to the specified emulation. When print data is given the PJL command but the specified emulation is not present, the data is processed by the default emulation.

The PJL Enter command specifies PostScript and PCL5e.

4. Resolution

The printer controller supports only 600-dpi binary images in single bit per pixel mode. The print engine does not support resolution settings other than 600 dpi (fixed at 600 dpi). When300 dpi is specified for resolution, 4 pixels are represented as 1 dot to create 300dpi image. In other words, the printer controller always sends 600-dpi images to the engine.

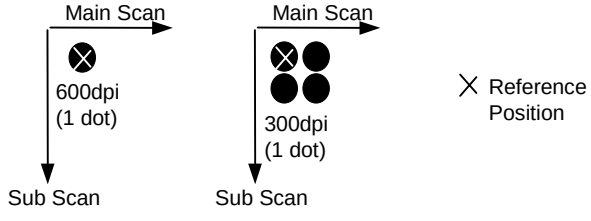

5. Font

A. Downloadable Font Types

The Cougar printing system supports the font types for download.

Page Description Language	AR-PB2
PCL 5e	TrueType Bitmap Intellifont
PostScript Level 2	Type 1 Bitmap Type 42

B. Location of Font Data

Font Data	Hardware	Size
PCL Roman 80 Fonts PS Roman 80 Fonts	Flash ROM #5	3MB

6. Language

A. Language Selection

The printing system will automatically switch to the correct emulation or switch to the fixed emulation mode.

Emulation setting mode		AR-PB2
Automatic		PS ↔ PCL
Fixed	1	PS/PCL

B. Job, control

The job control commands support PJL (Printer Job Language) which HP printers include. PJL is available for all emulations (PCL5e,PostScript).

7. Host I/O Port Selection

There are two host I/O ports, the P1284 port and the Network(NIC) port, as described before. The host I/O port can be selected between the I/O port automatic port switching and the I/O fixed port setting. The automatic port switching has two settings, between jobs and after I/O time-out.

Setting	Behavior	
Automatic Switching	Between Jobs	When receiving data is detected through a port, sensing data receipt from each port, considers the port as current (port automatic sensing processing), and processes the data received only through the current port. Then until the job ends in the situation described below in 1) or 2), the data through the current port is only processed. After the print job ends, the port automatic sensing processing restarts. 1) The print job is completed by the job-end command. 2) The current port gets into the state of waiting for data receipt, and after no data is received for a certain time (I/O time-out value), print job ends by the I/O time-out.
	After I/O Time-out	When receiving data is detected through a port, sensing data receipt from each port, considers the port as current (port automatic sensing processing) and processes the data received only through the current port. Then until the I/O time-out in the situation described below in 1), the data through the current port is only processed. After the I/O time-out, the port automatic sensing processing restarts. 1) The current port gets into the state of waiting for data receipt, and after no data is received for a certain time (I/O time-out value), the print job ends by the I/O time-out. (When the print job has not been completed , it ends simultaneously.
Fixed	Disables P1284 Port	Receives data only through the Network (NIC) port.
	Disables Network (NIC) Port	Receives data only through the P1284 port.

Note: In the I/O time-out, the count starts at the point that data is not acquired via the receiving buffer. When receiving the data until the I/O time-out, the count is reset to stop.
In the between jobs setting of the automatic switching, the conditions that a print job will be completed are as follows.

	Job Start		Job End
Common	• PJL JOB command	↔	• PJL EOJ command • I/O Timeout
PCL	• PJL ENTER LANGUAGE command (PCL) • Jobs starting with the PCL data	↔	• UEL command • <ESC>E • I/O Timeout
PS	• PJL ENTER LANGUAGE command (POSTSCRIPT) • Jobs starting with the PostScript data.	↔	• UEL command • <Ctrl-D> • I/O Timeout

[Example of Automatic Switching]

	Receiving Port	Job End Data
Job1:	NIC Port	Yes
Job2:	1284 Port	No
Job3:	NIC Port	Yes

1) Automatic Switching - Between Jobs

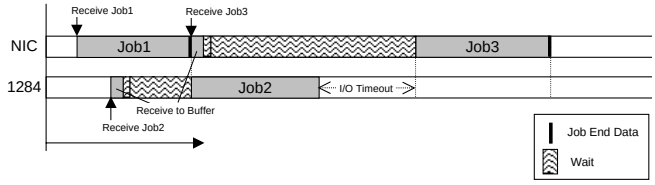

2) Automatic - After I/O Time Out

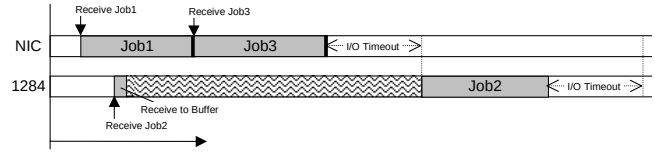

13. Memory Configuration

The following ROM are supported.

EPROM: Boot & Simulation Program

Flash ROM: Program &Font data

Boot ROM is selectable between EPROM and Flash ROM #5 using the jumper switching.

Flash ROM #5	4MB	Main Program
Flash ROM #5	3MB	PCL Roman 80 Fonts PS Roman 80 Fonts
Flash ROM #5	1MB	Boot/Simulation Program

14. Printer control PWB switch (short pin) and LED display

	Switch, LED	Function
Switch	RESET switch (SW102)	Processor and peripheral device initialization
	ABORT switch (SW101)	MMI* generation to processor
LED	POWER-LED (D114)	PWB power ON. Lighted when supplying power.
	RUN-LED (D113)	Processor operating status. Lights up when operating.
Software status	STO-LED (D109)	Lights UPD71055-A port 0 bit 4 at "0."
	ST1-LED (D110)	Lights UPD71055-A port 0 bit 5 at "0."
	ST2-LED (D111)	Lights UPD71055-A port 0 bit 6 at "0."
	ST3-LED (D112)	Lights UPD71055-A port 0 bit 7 at "0."

15. Confidential Print

The confidential print feature allows printing to be started only after entering the specified password on the operation panel. This feature is useful for printing secret document data on the printer located away from the user.

To execute confidential print, specify use of this feature and enter a password on the setting screen of the printer driver (Advanced tab in the Windows system, print conditions setting in the Macintosh system). The operation procedure on the operation panel for starting confidential print is described below. The maximum number of confidential print jobs that can be stored in the printer can be specified using a key operator program.

NOTES: Different first page, transparency inserts, and booklet print are not available with this feature.

Paper tray selection in the printer driver must be 'Auto Select'.

A confidential print data is deleted when printing is completed or the **CLEAR** (©) key is pressed during printing.

If the printer power switch is turned off or the printer is turned off by the auto power shut-off function, all confidential print data that has been stored in the printer will be deleted. The auto power shut-off time can be adjusted using a copier key operator program. If confidential print is often used, it is recommended to set a long auto power shut-off time.

In the following cases, the printer will cancel confidential print and output a notice page. The received print data will be cleared.

1. The maximum number of print jobs or the maximum number of pages specified with a key operator program is exceeded.
2. 'Custom paper size' is specified.

16. Tandem Print

If the printer model has the tandem copy/print feature and is connected with another copier of the same model through the tandem-connection cable so that the tandem copy feature can be used, the tandem print feature can be used. For printing multiple sets, two printers can be used simultaneously, allowing printing to be twice as fast as printing on one printer.

To execute tandem print, select this feature on the printer driver setting screen (Advanced tab in the Windows system, print conditions setting in the Macintosh system).

- If the printers are equipped with optional equipment, the two printers must be equipped with the same optional equipment. A dedicated tandem-connection cable AR-CA1 is required for tandem print.
- Paper tray selection in the printer driver must be 'Auto Select'.
- Different first page, transparency inserts, and confidential print are not available.

NOTES: If the printers are connected to the network, print data must be sent to the main printer for tandem print. If the data is sent to the sub printer, the data will be output without using the tandem print feature.

For tandem printing, the operation settings of the two copier/printers must be the same. For details on these settings, see the section of Tandem Copy in the copier operation manual.

To cancel tandem printing after starting, press the "**OFFLINE**" key on the main printer. Then press the **CLEAR** key on the main printer.

(Error message)

F9	0	Content	ICU-PRT communication trouble
		Detail	
		Cause	SCSI LSI abnormality ICU PWB defect SCSI connector connection defect Printer PWB defect
		Check and remedy	Replace the printer PWB. Check the SCSI connector. Replace the printer PWB. Replace the ICU PWB.
F9	01	Content	PRT DRAM trouble
		Detail	DRAM trouble in the option printer board. (When operating the scanner mode)
		Cause	DRAM module is broken and access cannot be made. DRAm module installation trouble
		Check and remedy	Check with SIM 57-1.
F9	02	Content	PRT Centro port check error
		Detail	Option printer board Centro port trouble
		Cause	Centro port defect Printer PWB defect
		Check and remedy	Replace the printer board.
F9	03	Content	Network card trouble.
		Detail	Network card self test trouble.
		Cause	Network card defecft. Printer PWB defect. Network card connector connection defect.
		Check and remedy	Check the Network card connector. Replace the printer PWB. Replace the Network card.
F9	04	Content	Printer program error.
		Detail	Program data trouble in the option printer board.
		Cause	Flash memory data is destroied.
		Check and remedy	Replace or rewrite the Flash memory. Replace the printer PWB.
F9	05	Content	Short of memory capacity on the ICU PWB
		Detail	Total memory is less than 16MB on the ICU PWB.
		Cause	Memory defect SIMM memory connector connection defect ICU PWB defect Wrong type SIMM memory is installed
		Check and remedy	Replace the ICU PWB Replace the memory Check the memory connector
F9	10	Content	PRT SCSI LSI abnormality
		Detail	An error occurred in SCSI communication with the option printer board.
		Cause	SCSI LSI abnormality ICU PWB defect Printer PWB defect SCSI connector connection defect
		Check and remedy	Replace the printer PWB. Check the SCSI connector. Replace the printer PWB. Replace the ICU PWB.
F9	90	Content	ICU-PRT communication trouble (PRT detection)
		Detail	
		Cause	SCSI LSI abnormality ICU PWB defect SCSI connector connection defect Printer PWB defect
		Check and remedy	Replace the printer PWB. Check the SCSI connector. Replace the printer PWB. Replace the ICU PWB.

SHARP PARTS GUIDE

MODEL AR-PB1/PB1A AR-PB2/PB2A

このパーツガイドに掲載されている表示価格ランクは消費税抜きです。

CONTENTS

1 ﾌﾟﾘﾝﾀｰﾕﾆｯﾄ(Printer unit)

2 ﾌﾟﾘﾝﾀｰ基板(Printer PWB)

3 梱包材＆付属品(Packing material & Accessories)

■ 索引(Index)

本書はサービス活動用に作成した資料です。
一部内容が製品の改良・改善等により予告なしに変わることがあります。

SHARP CORPORATION

This document has been published to be used for after sales service only.
The contents are subject to change without notice.

補修部品のランク付

市場における補修部品の在庫管理が、適正に運営出来る手助けとなることを、目的とします。

Ａランク ： 取替頻度が比較的多く、在庫を必要とするパーツ。

Ｂランク ： 取替頻度は比較的少ないが、在庫を必要とするパーツ。

Ｃランク ： 取替頻度はほとんどないと思われるパーツ。

Ｄランク ： 取替頻度はほとんどないが新品再生に必要なパーツ。

Ｅランク ： ユニットパーツ。サービス効率アップの為、在庫する事を推奨するパーツ。

Ｓランク ： 消耗品

但し、複写機のパーツについては、同一パーツ名であっても、下記パーツは、使用箇所の相違により、Ａ・Ｂランク分けします。

パーツ名 ： 金属製のギャー、スプロケット、ベアリング、ゴム製のベルト、スプリングクラッチ機構

Ａランク ： 常に回転しているか、付加がかかっている箇所に使用され、回転回数が増える事により、変形又は磨耗が生じその性能が発揮できなくなるパーツ。

Ｂランク ： 回転部分に使用されているが、磨耗度が比較的少ないパーツ。

DEFINITION

The definition of each Rank is as follows and also noted in the list

A : Parts necessary to be stocked as High usage parts.

B : Parts necessary to be stocked as Standard usage parts.

C : Low usage parts.

D : Parts necessary for refurbish.

E : Unit parts recommended to be stocked for efficient after sales service.
Please note that the lead time for the said parts may be longer than normal parts.

S : Consumable parts.

Please note that the following parts used in Copier under the same description are classified into A or B Rank depending upon the place used.

Example: Gear made of Metal, Sprocket, Bearing, Belt made of Rubber, Spring clutch mechanism.

A Rank : The parts which may be with the revolution or loading.

B Rank : Parts similar to A Rank parts, but are not included in Rank A.

安全性・信頼性確保のため部品は、必ず正規のものをご使用下さい。
⚠印の商品は、安全上重要な部品です。交換をする時は、安全および性能維持のため必ず指定の部品をご使用下さい。

Because parts marked with "⚠" is indispensable for the machine safety maintenance and operation, it must be replaced with the parts specific to the product specification.

---

1 ﾌﾟﾘﾝﾀｰﾕﾆｯﾄ(Printer unit)

NO.	PARTS CODE	PRICE RANK Ex.	PRICE RANK Ja.	NEW MARK	PART RANK	DESCRIPTION	
1	NFANP0058FCZZ	BA	FX		B	Printer box fan	ﾌﾟﾘﾝﾀｰﾎﾞｯｸｽﾌｧﾝ
2	XWHSD30-10080	AA	DD		C	Washer	ﾜｯｼｬ
3	XBPSD30P24000	AA	DD		C	Screw (3×24)	ﾋﾞｽ
4	XBBSD30P06000	AA	DD		C	Screw (3×6)	ﾋﾞｽ
5	CPWBN1278FC51	AY	FQ		E	Printer mother PWB	ﾌﾟﾘﾝﾀｰﾏｻﾞｰｷﾊﾞﾝ
6	DHAi-2850FCZZ	AU	EZ		C	Printer power supply harness	ﾌﾟﾘﾝﾀｰﾃﾞﾝｹﾞﾝﾊｰﾈｽ
7	PCÕVP1444FCZZ	AX	FG		C	Printer box cover	ﾌﾟﾘﾝﾀｰﾎﾞｯｸｽｶﾊﾞｰ
8	LDAiU0574FCZZ	AT	EZ		C	Printer box base	ﾌﾟﾘﾝﾀｰﾎﾞｯｸｽﾀﾞｲ
9	XBBSE30P06000	AA	DD		C	Screw (3×6)	ﾋﾞｽ
10	LPLTM5343FCZZ	AE	DS		C	Network board cover	ﾈｯﾄﾜｰｸﾎﾞｰﾄﾞｶﾊﾞｰ
11	XBPSE25P08000	AA	DD		C	Screw (2.5×8)	ﾋﾞｽ
12	PGSK-0033FCZZ	AK	EB		C	Gasket (UC-3E1259T)	ｶﾞｽｹｯﾄ
13	LPLTM5407FCZZ	AH	DX		C	Printer box side plate	ﾌﾟﾘﾝﾀｰﾎﾞｯｸｽｻｲﾄﾞｲﾀ
14	LX-BZ0828FCZZ	AD	DJ		C	Handle fixing screw	ﾄｯﾃｺﾃｲﾋﾞｽ
16	VHi28F322-02F	CA	TV		B	Flash ROM (28F322-02F)(Japan only) (AR-PB1A/PB1)[CN107]	ﾌﾗｯｼｭROM
	VHi28F322-01F	CA	TV		B	Flash ROM (28F322-01F)(Except Japan) (AR-PB2A/PB2)[CN107]	ﾌﾗｯｼｭROM
17	CPWBN1277FC52	AX	FG		E	Network interface PWB	ﾈｯﾄﾜｰｸﾁｭｳｹｲｷﾊﾞﾝ

1 ﾌﾟﾘﾝﾀｰﾕﾆｯﾄ(Printer unit)

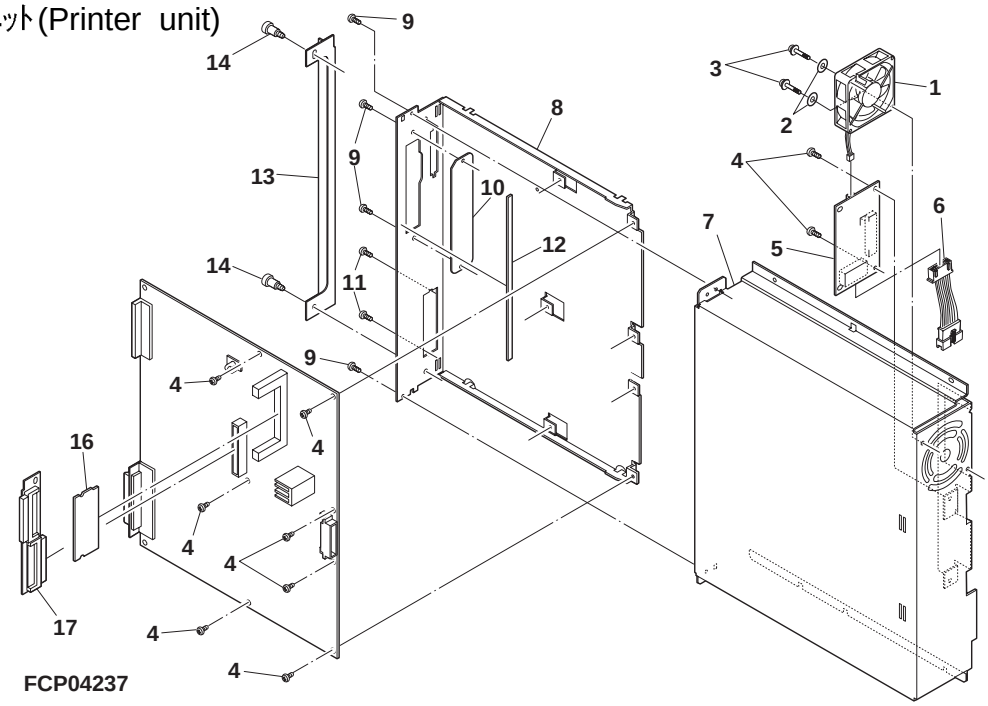

2 ﾌﾟﾘﾝﾀｰ基板(Printer PWB)

NO.	PARTS CODE	PRICE RANK Ex.	PRICE RANK Ja.	NEW MARK	PART RANK	DESCRIPTION
1	LHLDW1420FCZZ	AD	DJ		C	PWB holder (SRF5U) ｷﾊﾞﾝﾎﾙﾀﾞｰ
2	PCAPH0010GCZZ	AD	DJ		C	Cap (JM-2W-96) [JP109] ｷｬｯﾌﾟ
3	PRDAF0082FCZZ	AG	DS		C	Heat sink (PUG16-25) [IC166] ﾎｳﾈﾂﾊﾞﾝ
4	PSHEZ4684FCZZ	AC	DJ		C	Sheet (2067B) [IC166] ｸｰﾙｼｰﾄ
5	QCNCM0069GCZZ	AH	DX		C	Connector (53319-0200)(20pin) [CN116] ｺﾈｸﾀｰ
6	QCNCM5254NCZZ	AQ	EG		C	Connector (DHB-PB60)(60pin) [CN105] ｺﾈｸﾀｰ
7	QCNCW0946FCZZ	AH	DX		C	Connector (36pin) [CN101] 36PINｺﾈｸﾀ-
8	QCNCW7036XC5J	AP	EQ		C	Connector (PCSXE50LFDT)(40pin) [CN102] ｺﾈｸﾀｰ
9	QPiN-0003GCZZ	AC	DJ		C	Pin (T3B-SQ) [JP109] ﾋﾟﾝ
10	QSŌCZ0070FCZZ	AN	EG		C	Push memory socket (93674-51872) [CN107] ｿｹｯﾄ
	QSŌCZ0070FCZZ	AN	EG		C	Push memory socket (93674-51872) (AR-PB1A/PB1)[CN108,110,111,114] ｿｹｯﾄ
11	QSŌCZ0072FCZZ	AL	EB		C	SIMM socket (917970-1) [CN109,113] SIMMｿｹｯﾄ
12	QSŌCZ6428ACZZ	AE	DS		C	IC socket (28pin) [IC142] ICｿｹｯﾄ
13	RCRS-0041FCZZ	AQ	EQ		B	Crystal (40MHz) [X103] ｸﾘｽﾀﾙ
14	RCRS-0042FCZZ	AR	EQ		B	Crystal (74.9MHz) [X101] ｸﾘｽﾀﾙ
15	RMPTM0033FCZZ	AC	DD		B	Block resistor (4.7KΩ×8) [BR217,220] ﾌﾞﾛｯｸﾃｲｺｳ
16	RMPTM0034FCZZ	AC	DD		B	Block resistor (10KΩ×8) [BR202,203,205~216,218,219,221~245] ﾌﾞﾛｯｸﾃｲｺｳ
17	RMPTM0037FCZZ	AC	DD		B	Block resister (2KΩ×8) [BR201] ﾌﾞﾛｯｸﾃｲｺｳ
18	RMPTM0038FCZZ	AC	DD		B	Block resister (2.2KΩ×8) [BR204] ﾌﾞﾛｯｸﾃｲｺｳ
19	VCCCCY1HH101J	AA	DD		C	Capacitor (50WV 100pF) [C281] ｺﾝﾃﾞﾝｻｰ
20	VCCCCY1HH300J	AB	DD		C	Capacitor (50WV 30PF) [C376] ｺﾝﾃﾞﾝｻｰ
21	VCCUCY1AJ105Z	AC	DD		C	Capacitor (10WV 1.0µF) [C302,303,315,316] ｺﾝﾃﾞﾝｻｰ
22	VCEAPS0JC107M	AC	DD		C	Capacitor (6.3WV 100µF) [C107] ｺﾝﾃﾞﾝｻｰ
23	VCEAPS1CC106M	AC	DD		C	Capacitor (16WV 10µF) [C102,103,109] ｺﾝﾃﾞﾝｻｰ
24	VCEAPS1CC476M	AC	DJ		C	Capacitor (16WV 47µF) [C104,106] ｺﾝﾃﾞﾝｻｰ
25	VCEAPS1EC336M	AC	DD		C	Capacitor (25WV 35µF) [C105] ｺﾝﾃﾞﾝｻｰ
26	VCEAPS1HC106M	AD	DD		C	Capacitor (50WV 10µF) [C101,108] ｺﾝﾃﾞﾝｻｰ
27	VCKYCY1EF104Z	AA	DD		C	Capacitor (25WV 0.10µF) [C201,202,203,205,206,215,216,222~229,234~240,242~258] ｺﾝﾃﾞﾝｻｰ
	VCKYCY1EF104Z	AA	DD		C	Capacitor (25WV 0.10µF) [C260~280,282~299,304~312,314,317~368] ｺﾝﾃﾞﾝｻｰ
	VCKYCY1EF104Z	AA	DD		C	Capacitor (25WV 0.10µF) [C370~373,379~426] ｺﾝﾃﾞﾝｻｰ
28	VCKYCY1HB102K	AA	DD		C	Capacitor (50WV 1000pF) [C300,230] ｺﾝﾃﾞﾝｻｰ
29	VCKYCY1HB103K	AA	DD		C	Capacitor (50WV 0.010µF) [C301] ｺﾝﾃﾞﾝｻｰ
30	VCKYCY1HB222K	AA	DD		C	Capacitor (50WV 2200pF) [C207~214] ｺﾝﾃﾞﾝｻｰ
31	VHD1N4005E/-1	AB	DJ		B	Diode (1N4005) [D101~104,106] ﾀﾞｲｵｰﾄﾞ
32	VHDDSS133//-1	AA	DD		B	Diode (1SS133) [D107] ﾀﾞｲｵｰﾄﾞ
33	VHDSB140///-1	AF	DS		B	Diode (SB140) [D105] ﾀﾞｲｵｰﾄﾞ
34	VHi162244ATPV	AR	EQ		B	IC (162244ATPV) [IC136] IC
35	VHi162245ATPV	AS	EQ		B	IC (162245ATPV) [IC123,124,133,135] IC
36	VHi162373ATPV	AS	EQ		B	IC (162373ATPV) [IC105,120,122,129,134,143,144,145,146] IC
37	VHi162511ATPV	AV	FG		B	IC (162511ATPV) [IC138,139,140,141] IC
38	VHi1816-6//-1	AZ	FQ		B	IC (1816-6) [IC150,152,153,159,160,161,162] IC
39	VHi53CF96//-1	BH	HC		B	IC (53CF96-2) [IC114] IC
40	VHi74F74SJ/-1	AE	DS		B	IC (74F74SJ) [IC149] IC
41	VHi74LS245NS1	AF	EB		B	IC (74LS245NS1) [IC201] IC
42	VHi74LVT244NS	AR	EQ		B	IC (74LVT244NS) [IC104] IC
43	VHiAT28C64B-1	AZ	FQ		B	EEP ROM (AT28C64B) [IC142] EEP ROM
44	VHiCLCD1283QC	BF	GN		B	IC (CLCD1283QC) [IC106] IC

2 ﾌﾟﾘﾝﾀｰ基板(Printer PWB)

NO.	PARTS CODE	PRICE RANK Ex.	PRICE RANK Ja.	NEW MARK	PART RANK	DESCRIPTION
45	VHiFCT244ATS0	AN	EG		B	IC (FCT244ATS0) [IC101,148] IC
46	VHiGT64010AP1	CB	TX		B	IC (GT64010AP1) [IC125] IC
47	VHiLT1084CT-1	BA	FX		B	IC (LT1084CT) [IC166] IC
48	VHiQS3L384/-1	AP	EQ		B	IC (QS3L384) [IC102,109,110,111,112,113,115,116,117,118] IC
49	VHiRV470015MS	BV	NU		B	IC (RV470015MS) [IC126] IC
50	VHiSN74LS14NS	AL	EG		B	IC (SN74LS14NS) [IC156] IC
51	VHiSN74LS244S	AF	DS		B	IC (SN74LS244S) [IC107,108] IC
52	VHiT16244ATPV	AR	EQ		B	IC (T16244ATPV) [IC147] IC
53	VHiTC190G7034	BB	GD		B	IC (TC190G7034) [IC128] IC
54	VHiTD62504F-1	AF	DS		B	IC (TD62504F) [IC164] IC
55	VHiUPD71055G/	AP	EQ		B	IC (UPD71051G) [IC127,130] IC
56	VHPGL3PR8//-1	AA	DD		B	LED (GL3PR8)(red) [D109~114] 発光ﾀﾞｲｵｰﾄﾞ
57	VRS-CY1JD000J	AA	DD		C	Resistor (1/16W 0Ω ±5%) [R216,426,427,428,432,433,434,328,400,299,388,323,336~339] ﾃｲｺｳ
	VRS-CY1JD000J	AA	DD		C	Resistor (1/16W 0Ω ±5%) [R341,342,316,319,321,322,348,383,390,429,430,431,218,461] ﾃｲｺｳ
58	VRS-CY1JD100J	AA	DD		C	Resistor (1/16W 10Ω ±5%) [R103,104,344,347] ﾃｲｺｳ
59	VRS-CY1JD101J	AA	DD		C	Resistor (1/16W 100Ω ±5%) [R384,385,386,387] ﾃｲｺｳ
60	VRS-CY1JD102J	AA	DD		C	Resistor (1/16W 1.0KΩ ±5%) [R263,391,393,398,399,404,405,410,415,208,266,267,268,272,416] ﾃｲｺｳ
61	VRS-CY1JD103J	AA	DD		C	Resistor (1/16W 10KΩ ±5%) [R201~203,213,214,270,271,273~275,280~291] ﾃｲｺｳ
	VRS-CY1JD103J	AA	DD		C	Resistor (1/16W 10KΩ ±5%) [R293~297,301~304,306~315,325,326] ﾃｲｺｳ
	VRS-CY1JD103J	AA	DD		C	Resistor (1/16W 10KΩ ±5%) [R331~333,350~363,389,392,401,406~409] ﾃｲｺｳ
	VRS-CY1JD103J	AA	DD		C	Resistor (1/16W 10KΩ ±5%) [R411~414,418~421,460,467,468] ﾃｲｺｳ
62	VRS-CY1JD122J	AA	DD		C	Resistor (1/16W 1.2KΩ ±5%) [R265] ﾃｲｺｳ
63	VRS-CY1JD150J	AA	DD		C	Resistor (1/16W 15OΩ ±5%) [R210] ﾃｲｺｳ
64	VRS-CY1JD220J	AA	DD		C	Resistor (1/16W 22Ω ±5%) [R292,327,330,365,373,375,397,264] ﾃｲｺｳ
65	VRS-CY1JD330J	AA	DD		C	Resistor (1/16W 33Ω ±5%) [R204~207,237~244,370~372,380,435~458] ﾃｲｺｳ
66	VRS-CY1JD332J	AA	DD		C	Resistor (1/16W 3.3KΩ ±5%) [R279] ﾃｲｺｳ
67	VRS-CY1JD333J	AA	DD		C	Resistor (1/16W 33KΩ ±5%) [R403] ﾃｲｺｳ
68	VRS-CY1JD470J	AA	DD		C	Resistor (1/16W 47Ω ±5%) [R366~369,376~379,381,382] ﾃｲｺｳ
69	VRS-CY1JD471J	AA	DD		C	Resistor (1/16W 470Ω ±5%) [R345,346,417,422~425] ﾃｲｺｳ
70	VRS-CY1JD472J	AA	DD		C	Resistor (1/16W 4.7KΩ ±5%) [R305,324] ﾃｲｺｳ
71	VRS-CY1JD473J	AA	DD		C	Resistor (1/16W 47KΩ ±5%) [R402] ﾃｲｺｳ
72	VRS-CY1JD562J	AA	DD		C	Resistor (1/16W 5.6KΩ ±5%) [R396] ﾃｲｺｳ
73	VRS-TW2ED221J	AA	DD		C	Resistor (1/4W 220Ω ±5%) [R219~236] ﾃｲｺｳ
74	VRS-TW2ED331J	AA	DD		C	Resistor (1/4W 330Ω ±5%) [R245~262] ﾃｲｺｳ
75	XBBSD30P06000	AA	DD		C	Screw (3×6) [IC166] ﾋﾞｽ
501	CPWBN1385FC51	BB	GD		E	FN1 Mask ROM Unit (Japan only) (AR-PB1A/PB1)[CN114] FN1 ﾏｽｸROMﾕﾆｯﾄ
	CPWBN1385FC52	BB	GD		E	FN2 Mask ROM Unit (Japan only) (AR-PB1A/PB1)[CN111] FN2 ﾏｽｸROMﾕﾆｯﾄ
	CPWBN1385FC53	BB	GD		E	FN3 Mask ROM Unit (Japan only) (AR-PB1A/PB1)[CN110] FN3 ﾏｽｸROMﾕﾆｯﾄ
	CPWBN1385FC54	BB	GD		E	FN4 Mask ROM Unit (Japan only) (AR-PB1A/PB1)[CN108] FN4 ﾏｽｸROMﾕﾆｯﾄ
	ﾕﾆｯﾄ (Unit)					
901	CPWBN1275FC51	CZ	**		E	Printer PWB unit (Japan only AR-PB1A/PB1) [Not include No.501] ﾌﾟﾘﾝﾀｰPWB ﾕﾆｯﾄ
	CPWBN1275FC52	CZ	**		E	Printer PWB unit (Except japan AR-PB2A/PB2) [Not include No.501] ﾌﾟﾘﾝﾀｰPWB ﾕﾆｯﾄ

3 梱包材＆付属品(Packing material & Accessories)

NO.	PARTS CODE	PRICE RANK Ex.	PRICE RANK Ja.	NEW MARK	PART RANK	DESCRIPTION
1	LHLDW1155FCZZ	AC	DJ		C	Wire holder (LWS3S2W) ﾜｲﾔｰｻﾎﾟｰﾄﾞﾙ
2	LBNDJ0014FCZ1	AB	DJ		C	Wire band (CV-150) ﾜｲﾔｰﾊﾞﾝﾄﾞ
3	XHBSE30P04000	AA	DD		C	Screw (3×4) ﾋﾞｽ
4	TLABZ4173FCZZ	AG	DX		C	Connector caution label (Except USA,CANADA) (AR-PB2A/PB2) ｾﾂｿﾞｸｷｷﾁｭｳｲﾗﾍﾞﾙ
5	SSAKA0019SCZZ	AA	DD		D	Vinyl bag (120×180mm) ﾎﾟﾘﾌﾞｸﾛ
6	TCADZ1478FCZZ	AE	DS	N	D	Inst.card (Japanese)(Japan) (AR-PB1A) ｾｯﾁﾃｼﾞｭﾝｼｮ J
	TCADZ1418FCZZ	AD	DJ		D	Inst.card (Japanese)(Japan) (AR-PB1) ｾｯﾁﾃｼﾞｭﾝｼｮ J
	TCADZ1479FCZZ	AC	DJ	N	D	Inst.card (English)(USA,CANADA,Europe,Australia,New Zealand) (AR-PB2A) ｾｯﾁﾃｼﾞｭﾝｼｮ U
	TCADZ1419FCZZ	AC	DJ		D	Inst.card (English)(USA,CANADA,Europe,Australia,New Zealand) (AR-PB2) ｾｯﾁﾃｼﾞｭﾝｼｮ U
	TCADZ1480FCZZ	AH	DX	N	D	Inst.card (E,F,G,S)(CANADA,Europe,Others) (AR-PB2A) ｾｯﾁﾃｼﾞｭﾝｼｮ E4
	TCADZ1420FCZZ	AH	DX		D	Inst.card (E,F,G,S)(CANADA,Europe,Others) (AR-PB2) ｾｯﾁﾃｼﾞｭﾝｼｮ E4
	TCADZ1486FCZZ	AD	DJ	N	D	ARNC3D inst.card (Japanese)(Japan) (AR-PB1A) ARNC3D ｾｯﾁﾃｼﾞｭﾝｼｮ J
	TCADZ1487FCZZ	AC	DJ	N	D	ARNC3D inst.card (English) (USA,CANADA,Europe,Australia,New Zealand) (AR-PB2A) ARNC3D ｾｯﾁﾃｼﾞｭﾝｼｮ U
	TCADZ1488FCZZ	AE	DJ	N	D	ARNC3D inst.card (E,F,G,S)(CANADA,Europe,Others) (AR-PB2A) ARNC3D ｾｯﾁﾃｼﾞｭﾝｼｮ E4
7	QCNW-0153FCZ1	BC	GJ		C	FAX interface cable FAXﾁｭｳｹｲｹｰﾌﾞﾙ
8	SSAKA5003CCZZ	AA	DD		D	Vinyl bag (140×260mm) ﾎﾟﾘﾌﾞｸﾛ
10	SPAKA5970FCZZ	AG	DS		D	Accessories sleeve ﾌｿﾞｸｽﾘｰﾌﾞ
12	SPAKA5821FCZ1	AL	EB		D	Spacer ｽﾍﾟｰｻｰ
13	CiNSJ1990FC51	AZ	ZZ	N	D	Operation manual (Japan only) (AR-PB1A) ﾄﾘｱﾂｶｲｾﾂﾒｲｼｮ
	CiNSJ1938FC51	AY	ZZ		D	Operation manual (Japan only) (AR-PB1) ﾄﾘｱﾂｶｲｾﾂﾒｲｼｮ
	CiNSE1991FC51	AT	EZ	N	D	Operation manual (English)(USA,CANADA) (AR-PB2A) ﾄﾘｱﾂｶｲｾﾂﾒｲｼｮ E
	CiNSE1779FC51	AQ	EQ		D	Operation manual (English)(USA,CANADA) (AR-PB2) ﾄﾘｱﾂｶｲｾﾂﾒｲｼｮ E
	CiNSE1992FC51	AT	EZ	N	D	Operation manual (English)(Australia,New Zealand,Europe) (AR-PB2A) ﾄﾘｱﾂｶｲｾﾂﾒｲｼｮ EG

3 梱包材＆付属品(Packing material & Accessories)

NO.	PARTS CODE	PRICE RANK Ex.	PRICE RANK Ja.	NEW MARK	PART RANK	DESCRIPTION
13	CiNSE1780FC51	AQ	EQ		D	Operation manual (English)(Australia,New Zealand,Europe) (AR-PB2) ﾄﾘｱﾂｶｲｾﾂﾒｲｼｮ EG
	CiNSF1993FC51	AX	FG	N	D	Operation manual (French)(CANADA,Europe) (AR-PB2A) ﾄﾘｱﾂｶｲｾﾂﾒｲｼｮ F,FG
	CiNSF1782FC51	AV	FG		D	Operation manual (French)(CANADA,Europe) (AR-PB2) ﾄﾘｱﾂｶｲｾﾂﾒｲｼｮ F,FG
	CiNSG1994FC51	AX	FG	N	D	Operation manual (German)(For Europe) (AR-PB2A) ﾄﾘｱﾂｶｲｾﾂﾒｲｼｮ G
	CiNSG1781FC51	AV	FG		D	Operation manual (German)(For Europe) (AR-PB2) ﾄﾘｱﾂｶｲｾﾂﾒｲｼｮ G
	CiNSH1995FC51	AX	FG	N	D	Operation manual (Dutch)(For Europe) (AR-PB2A) ﾄﾘｱﾂｶｲｾﾂﾒｲｼｮ H
	CiNSH1785FC51	AV	FG		D	Operation manual (Dutch)(For Europe) (AR-PB2) ﾄﾘｱﾂｶｲｾﾂﾒｲｼｮ H
	CiNSS1996FC51	AX	FG	N	D	Operation manual (Spanish)(For Europe) (AR-PB2A) ﾄﾘｱﾂｶｲｾﾂﾒｲｼｮ S
	CiNSS1783FC51	AV	FG		D	Operation manual (Spanish)(For Europe) (AR-PB2) ﾄﾘｱﾂｶｲｾﾂﾒｲｼｮ S
	CiNSi1997FC51	AX	FG	N	D	Operation manual (Italian)(For Europe) (AR-PB2A) ﾄﾘｱﾂｶｲｾﾂﾒｲｼｮ T
	CiNSi1784FC51	AV	FG		D	Operation manual (Italian)(For Europe) (AR-PB2) ﾄﾘｱﾂｶｲｾﾂﾒｲｼｮ T
	CiNSW1998FC51	AX	FG	N	D	Operation manual (Swedish)(For Europe) (AR-PB2A) ﾄﾘｱﾂｶｲｾﾂﾒｲｼｮ W
	CiNSW1786FC51	AV	FG		D	Operation manual (Swedish)(For Europe) (AR-PB2) ﾄﾘｱﾂｶｲｾﾂﾒｲｼｮ W
14	SSAKA2341QCZZ	AA	DD		D	Vinyl bag (230×340mm) ﾎﾞﾘﾌﾞｸﾛ
15	SPAKP2792RCZZ	AE	DS		D	Vinyl bag (460×500mm) ﾎﾞﾘﾌﾞｸﾛ
16	SPAKA5969FCZZ	AF	DS		D	Protection packing cushion B ﾎｺﾞｻﾞｲB
17	SPAKA5820FCZZ	AH	DX		D	Packing cushion ﾊﾟｯｷﾝｸﾞｸｯｼｮﾝ
18	SPAKA5968FCZZ	AD	DJ		D	Protection packing cushion A ﾎｺﾞｻﾞｲA
19	SPAKA5946FCZ1	AF	DS		D	Spacer ｽﾍﾟｰｻｰ
20	SPAKC6091FCZZ	AL	EB	N	D	Packing case (Japnese)(Japan) (AR-PB1A) ﾊﾟｯｷﾝｸﾞｹｰｽ J
	SPAKC5819FC14	AP	EQ		D	Packing case (Japnese)(Japan) (AR-PB1) ﾊﾟｯｷﾝｸﾞｹｰｽ J
	SPAKC6091FC11	AL	EB	N	D	Packing case (English)(USA,CANADA) (AR-PB2A) ﾊﾟｯｷﾝｸﾞｹｰｽ E
	SPAKC5819FC15	AP	EQ		D	Packing case (English)(USA,CANADA) (AR-PB2) ﾊﾟｯｷﾝｸﾞｹｰｽ E
	SPAKC6091FC12	AL	EB	N	D	Packing case (English)(Australia,New Zealand,Europe) (AR-PB2A) ﾊﾟｯｷﾝｸﾞｹｰｽ EG
	SPAKC5819FC16	AP	EQ		D	Packing case (English)(Australia,New Zealand,Europe) (AR-PB2) ﾊﾟｯｷﾝｸﾞｹｰｽ EG
	SPAKC6091FC13	AL	EB	N	D	Packing case (French)(CANADA) (AR-PB2A) ﾊﾟｯｷﾝｸﾞｹｰｽ F
	SPAKC5819FC17	AP	EQ		D	Packing case (French)(CANADA) (AR-PB2) ﾊﾟｯｷﾝｸﾞｹｰｽ F
	SPAKC6091FC14	AL	EB	N	D	Packing case (French)(For Europe) (AR-PB2A) ﾊﾟｯｷﾝｸﾞｹｰｽ FG
	SPAKC5819FC18	AP	EQ		D	Packing case (French)(For Europe) (AR-PB2) ﾊﾟｯｷﾝｸﾞｹｰｽ FG
	SPAKC6091FC15	AL	EB	N	D	Packing case (German)(For Europe) (AR-PB2A) ﾊﾟｯｷﾝｸﾞｹｰｽ G
	SPAKC5819FC19	AP	EQ		D	Packing case (German)(For Europe) (AR-PB2) ﾊﾟｯｷﾝｸﾞｹｰｽ G
	SPAKC6091FC16	AL	EB	N	D	Packing case (Dutch)(For Europe) (AR-PB2A) ﾊﾟｯｷﾝｸﾞｹｰｽ H
	SPAKC5819FC20	AP	EQ		D	Packing case (Dutch)(For Europe) (AR-PB2) ﾊﾟｯｷﾝｸﾞｹｰｽ H
	SPAKC6091FC17	AL	EB	N	D	Packing case (Spanish)(For Europe) (AR-PB2A) ﾊﾟｯｷﾝｸﾞｹｰｽ S
	SPAKC5819FC21	AP	EQ		D	Packing case (Spanish)(For Europe) (AR-PB2) ﾊﾟｯｷﾝｸﾞｹｰｽ S
	SPAKC6091FC18	AL	EB	N	D	Packing case (Italian)(For Europe) (AR-PB2A) ﾊﾟｯｷﾝｸﾞｹｰｽ T
	SPAKC5819FC22	AP	EQ		D	Packing case (Italian)(For Europe) (AR-PB2) ﾊﾟｯｷﾝｸﾞｹｰｽ T
	SPAKC6091FC19	AL	EB	N	D	Packing case (Swedish)(For Europe) (AR-PB2A) ﾊﾟｯｷﾝｸﾞｹｰｽ W
	SPAKC5819FC23	AP	EQ		D	Packing case (Swedish)(For Europe) (AR-PB2) ﾊﾟｯｷﾝｸﾞｹｰｽ W

3 梱包材＆付属品(Packing material & Accessories)

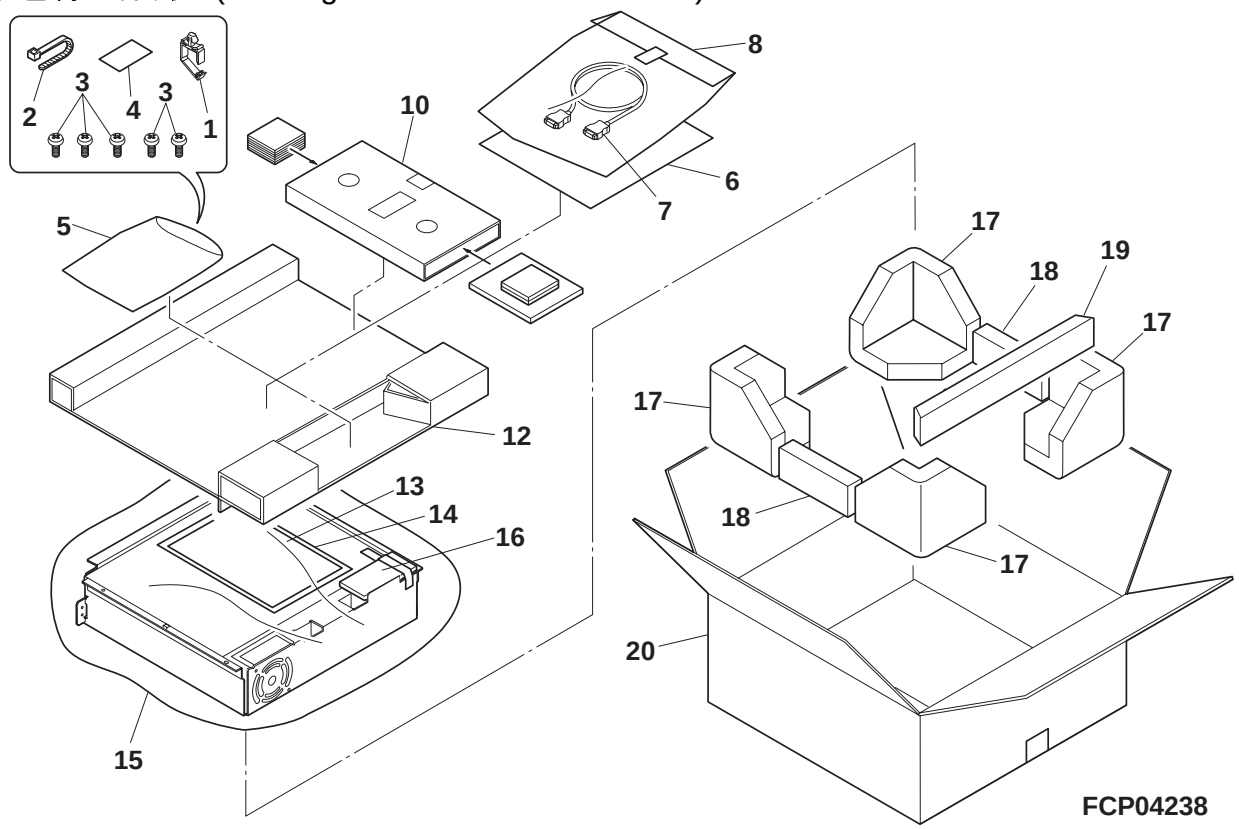

■ 索引(Index)

PARTS CODE	JAPAN ONLY ORDER CODE	NO.	PRICE R. Ex.	PRICE R. Ja.	NEW	P/R
【C】						
CiNSE1779FC51	572 916 1631	3- 13	AQ	EQ		D
CiNSE1780FC51	572 916 1632	3- 13	AQ	EQ		D
CiNSE1940FC51	572 916 1789	3- 13	AT	EZ		D
CiNSE1991FC51	572 916 1865	3- 13	AT	EZ	N	D
CiNSE1992FC51	572 916 1866	3- 13	AT	EZ	N	D
CiNSF1782FC51	572 916 1633	3- 13	AV	FG		D
CiNSF1941FC51	572 916 1790	3- 13	AT	EZ		D
CiNSF1993FC51	572 916 1867	3- 13	AX	FG	N	D
CiNSG1781FC51	572 916 1635	3- 13	AV	FG		D
CiNSG1942FC51	572 916 1791	3- 13	AT	EZ		D
CiNSG1994FC51	572 916 1868	3- 13	AX	FG	N	D
CiNSH1785FC51	572 916 1636	3- 13	AV	FG		D
CiNSH1943FC51	572 916 1792	3- 13	AT	EZ		D
CiNSH1995FC51	572 916 1869	3- 13	AX	FG	N	D
CiNSi1784FC51	572 916 1637	3- 13	AV	FG		D
CiNSi1945FC51	572 916 1793	3- 13	AT	EZ		D
CiNSi1997FC51	572 916 1870	3- 13	AX	FG	N	D
CiNSJ1938FC51	572 916 1762	3- 13	AY	ZZ		D
CiNSJ1990FC51	572 916 1871	3- 13	AZ	ZZ	N	D
CiNSS1783FC51	572 916 1634	3- 13	AV	FG		D
CiNSS1944FC51	572 916 1794	3- 13	AT	EZ		D
CiNSS1996FC51	572 916 1872	3- 13	AX	FG	N	D
CiNSW1786FC51	572 916 1638	3- 13	AV	FG		D
CiNSW1946FC51	572 916 1795	3- 13	AT	EZ		D
CiNSW1998FC51	572 916 1873	3- 13	AX	FG	N	D
CPWBN1275FC51	572 684 3333	2-901	CZ	**		E
CPWBN1275FC52	572 684 3323	2-901	CZ	**		E
CPWBN1277FC52	572 684 3550	1- 17	AX	FG		E
CPWBN1278FC51	572 684 3325	1- 5	AY	FQ		E
CPWBN1385FC51	572 684 3353	2-501	BB	GD		E
CPWBN1385FC52	572 684 3354	2-501	BB	GD		E
CPWBN1385FC53	572 684 3355	2-501	BB	GD		E
CPWBN1385FC54	572 684 3356	2-501	BB	GD		E
【D】						
DHAi-2850FCZZ	572 542 1463	1- 6	AU	EZ		C
【L】						
LBNDJ0014FCZ1	572 201 0163	3- 2	AB	DJ		C
LDAiU0574FCZZ	572 210 1114	1- 8	AT	EZ		C
LHLDW1155FCZZ	572 214 1336	3- 1	AC	DJ		C
LHLDW1420FCZZ	572 214 1918	2- 1	AD	DJ		C
LPLTM5343FCZZ	572 221 6520	1- 10	AE	DS		C
LPLTM5407FCZZ	572 221 7090	1- 13	AH	DX		C
LX-BZ0828FCZZ	572 970 1813	1- 14	AD	DJ		C
【N】						
NFANP0058FCZZ	572 277 0085	1- 1	BA	FX		B
【P】						
PCAPH0010GCZZ	578 312 0023	2- 2	AD	DJ		C
PCŌVP1444FCZZ	572 323 1934	1- 7	AX	FG		C
PGSK-0033FCZZ	572 350 0035	1- 12	AK	EB		C
PRDAF0082FCZZ	572 397 0176	2- 3	AG	DS		C
PSHEZ4684FCZZ	572 403 4410	2- 4	AC	DJ		C
【Q】						
QCNCM0069GCZZ	578 510 0217	2- 5	AH	DX		C
QCNCM5254NCZZ	585 510 0056	2- 6	AQ	EG		C
QCNCW0946FCZZ	594 510 0500	2- 7	AH	DX		C
QCNCW7036XC5J	569 510 0095	2- 8	AP	EQ		C
QCNW-0153FCZ1	572 512 0373	3- 7	BC	GJ		C
QPiN-0003GCZZ	578 523 0004	2- 9	AC	DJ		C
QSŌCZ0070FCZZ	572 527 0110	2- 10	AN	EG		C
QSŌCZ0072FCZZ	572 527 0114	2- 11	AL	EB		C
QSŌCZ6428ACZZ	541 527 1013	2- 12	AE	DS		C
【R】						
RCRS-0041FCZZ	572 616 0107	2- 13	AQ	EQ		B
RCRS-0042FCZZ	572 616 0106	2- 14	AR	EQ		B
RMPTM0033FCZZ	572 631 0252	2- 15	AC	DD		B
RMPTM0034FCZZ	572 631 0253	2- 16	AC	DD		B
RMPTM0037FCZZ	572 631 0269	2- 17	AC	DD		B
RMPTM0038FCZZ	572 631 0270	2- 18	AC	DD		B
【S】						
SPAKA5820FCZZ	572 902 1357	3- 17	AH	DX		D
SPAKA5821FCZ1	572 902 1410	3- 12	AL	EB		D
SPAKA5946FCZ1	572 902 1488	3- 19	AF	DS		D
SPAKA5968FCZZ	572 902 1489	3- 18	AD	DJ		D
SPAKA5969FCZZ	572 902 1490	3- 16	AF	DS		D
SPAKA5970FCZZ	572 902 1491	3- 10	AG	DS		D
SPAKC5819FC14	572 901 1471	3- 20	AP	EQ		D
SPAKC5819FC15	572 901 1472	3- 20	AP	EQ		D
SPAKC5819FC16	572 901 1473	3- 20	AP	EQ		D
SPAKC5819FC17	572 901 1474	3- 20	AP	EQ		D
SPAKC5819FC18	572 901 1475	3- 20	AP	EQ		D
SPAKC5819FC19	572 901 1476	3- 20	AP	EQ		D
SPAKC5819FC20	572 901 1477	3- 20	AP	EQ		D
SPAKC5819FC21	572 901 1478	3- 20	AP	EQ		D
SPAKC5819FC22	572 901 1479	3- 20	AP	EQ		D
SPAKC5819FC23	572 901 1480	3- 20	AP	EQ		D
SPAKC6091FC11	572 901 1694	3- 20	AL	EB	N	D
SPAKC6091FC12	572 901 1695	3- 20	AL	EB	N	D
SPAKC6091FC13	572 901 1696	3- 20	AL	EB	N	D
SPAKC6091FC14	572 901 1697	3- 20	AL	EB	N	D
SPAKC6091FC15	572 901 1698	3- 20	AL	EB	N	D
SPAKC6091FC16	572 901 1699	3- 20	AL	EB	N	D
SPAKC6091FC17	572 901 1700	3- 20	AL	EB	N	D
SPAKC6091FC18	572 901 1701	3- 20	AL	EB	N	D
SPAKC6091FC19	572 901 1702	3- 20	AL	EB	N	D
SPAKC6091FCZZ	572 901 1693	3- 20	AL	EB	N	D
SPAKP2792RCZZ	574 905 0001	3- 15	AE	DS		D
SSAKA0019SCZZ	541 906 5013	3- 5	AA	DD		D
SSAKA2341QCZZ	595 906 0010	3- 14	AA	DD		D
SSAKA5003CCZZ	500 906 0006	3- 8	AA	DD		D
【T】						
TCADZ1418FCZZ	572 913 0878	3- 6	AD	DJ		D
TCADZ1419FCZZ	572 913 0879	3- 6	AC	DJ		D
TCADZ1420FCZZ	572 913 0880	3- 6	AH	DX		D
TCADZ1478FCZZ	572 913 0937	3- 6	AE	DS	N	D
TCADZ1479FCZZ	572 913 0938	3- 6	AC	DJ	N	D
TCADZ1480FCZZ	572 913 0939	3- 6	AH	DX	N	D
TCADZ1486FCZZ	572 913 0940	3- 6	AD	DJ	N	D
TCADZ1487FCZZ	572 913 0941	3- 6	AC	DJ	N	D
TCADZ1488FCZZ	572 913 0942	3- 6	AE	DJ	N	D
TLABZ4173FCZZ	572 917 3365	3- 4	AG	DX		C
【V】						
VCCCCY1HH101J	507 591 5030	2- 19	AA	DD		C
VCCCCY1HH300J	594 593 0051	2- 20	AB	DD		C
VCCUCY1AJ105Z	596 593 0899	2- 21	AC	DD		C
VCEAPS0JC107M	572 594 0750	2- 22	AC	DD		C
VCEAPS1CC106M	588 594 0085	2- 23	AC	DD		C
VCEAPS1CC476M	567 594 0128	2- 24	AC	DJ		C
VCEAPS1EC336M	572 594 0822	2- 25	AC	DD		C
VCEAPS1HC106M	588 594 0086	2- 26	AD	DD		C
VCKYCY1EF104Z	507 591 5036	2- 27	AA	DD		C
VCKYCY1HB102K	594 593 0044	2- 28	AA	DD		C
VCKYCY1HB103K	585 593 0232	2- 29	AA	DD		C
VCKYCY1HB222K	595 593 0027	2- 30	AA	DD		C
VHD1N4005E/-1	572 570 0480	2- 31	AB	DJ		B
VHDDSS133//-1	500 570 5006	2- 32	AA	DD		B
VHDSB140///-1	579 570 0115	2- 33	AF	DS		B
VHi162244ATPV	572 573 1883	2- 34	AR	EQ		B
VHi162245ATPV	572 573 1352	2- 35	AS	EQ		B
VHi162373ATPV	572 573 1353	2- 36	AS	EQ		B
VHi162511ATPV	572 573 1884	2- 37	AV	FG		B
VHi1816-6//-1	572 573 2066	2- 38	AZ	FQ		B
VHi28F322-01F	572 573 1879	1- 16	CA	TV		B
VHi28F322-02F	572 573 1865	1- 16	CA	TV		B
VHi53CF96//-1	578 573 0737	2- 39	BH	HC		B
VHi74F74SJ/-1	596 573 0848	2- 40	AE	DS		B
VHi74LS245NS1	596 573 0697	2- 41	AF	EB		B
VHi74LVT244NS	572 573 1889	2- 42	AR	EQ		B
VHiAT28C64B-1	572 573 1201	2- 43	AZ	FQ		B
VHiCLCD1283QC	572 573 1829	2- 44	BF	GN		B
VHiFCT244ATS0	572 573 1881	2- 45	AN	EG		B
VHiGT64010AP1	572 573 1834	2- 46	CB	TX		B
VHiLT1084CT-1	572 573 1830	2- 47	BA	FX		B
VHiQS3L384/-1	596 573 2407	2- 48	AP	EQ		B
VHiRV470015MS	572 573 1878	2- 49	BV	NU		B
VHiSN74LS14NS	596 573 0062	2- 50	AL	EG		B
VHiSN74LS244S	595 573 1125	2- 51	AF	DS		B
VHiT16244ATPV	572 573 1882	2- 52	AR	EQ		B
VHiTC190G7034	572 573 1831	2- 53	BB	GD		B
VHiTD62504F-1	595 573 1805	2- 54	AF	DS		B
VHiUPD71055G/	567 573 0234	2- 55	AP	EQ		B
VHPGL3PR8//-1	507 574 5003	2- 56	AA	DD		B
VRS-CY1JD000J	507 581 5050	2- 57	AA	DD		C
VRS-CY1JD100J	596 581 0256	2- 58	AA	DD		C
VRS-CY1JD101J	596 581 0257	2- 59	AA	DD		C
VRS-CY1JD102J	571 581 0007	2- 60	AA	DD		C
VRS-CY1JD103J	500 581 5097	2- 61	AA	DD		C
VRS-CY1JD122J	595 581 0002	2- 62	AA	DD		C
VRS-CY1JD150J	571 581 0874	2- 63	AA	DD		C
VRS-CY1JD220J	507 581 5055	2- 64	AA	DD		C

PARTS CODE	JAPAN ONLY ORDER CODE	NO.	PRICE R. Ex.	PRICE R. Ja.	NEW	P/R
VRS-CY1JD330J	596 581 0263	2- 65	AA	DD		C
VRS-CY1JD332J	500 581 5112	2- 66	AA	DD		C
VRS-CY1JD333J	595 581 0105	2- 67	AA	DD		C
VRS-CY1JD470J	571 581 0877	2- 68	AA	DD		C
VRS-CY1JD471J	571 581 0002	2- 69	AA	DD		C
VRS-CY1JD472J	595 581 0069	2- 70	AA	DD		C
VRS-CY1JD473J	507 581 5058	2- 71	AA	DD		C
VRS-CY1JD562J	595 581 0072	2- 72	AA	DD		C
VRS-TW2ED221J	567 581 0008	2- 73	AA	DD		C
VRS-TW2ED331J	569 581 0003	2- 74	AA	DD		C
【X】						
XBBSD30P06000	541 970 5028	1- 4	AA	DD		C
〃	541 970 5028	2- 75	AA	DD		C
XBBSE30P06000	595 970 0127	1- 9	AA	DD		C
XBPSD30P24000	571 970 0178	1- 3	AA	DD		C
XBPSE25P08000	569 970 0075	1- 11	AA	DD		C
XHBSE30P04000	595 970 0160	3- 3	AA	DD		C
XWHSD30-10080	595 990 0033	1- 2	AA	DD		C

PARTS CODE	JAPAN ONLY ORDER CODE	NO.	PRICE R. Ex.	PRICE R. Ja.	NEW	P/R

CAUTION FOR BATTERY REPLACEMENT

(Danish) ADVARSEL !
Lithiumbatteri – Eksplosionsfare ved fejlagtig håndtering.
Udskiftning må kun ske med batteri
af samme fabrikat og type.
Levér det brugte batteri tilbage til leverandoren.

(English) Caution !
Danger of explosion if battery is incorrectly replaced.
Replace only with the same or equivalent type
recommended by the manufacturer.
Dispose of used batteries according to manufacturer's instructions.

(Finnish) VAROITUS
Paristo voi räjähtää, jos se on virheellisesti asennettu.
Vaihda paristo ainoastaan laitevalmistajan suosittelemaan
tyyppiin. Hävitä käytetty paristo valmistajan ohjeiden
mukaisesti.

(French) ATTENTION
Il y a danger d'explosion s' il y a remplacement incorrect
de la batterie. Remplacer uniquement avec une batterie du
même type ou d'un type équivalent recommandé par
le constructeur.
Mettre au rebut les batteries usagées conformément aux
instructions du fabricant.

(Swedish) VARNING
Explosionsfara vid felaktigt batteribyte.
Använd samma batterityp eller en ekvivalent
typ som rekommenderas av apparattillverkaren.
Kassera använt batteri enligt fabrikantens
instruktion.

(German) Achtung
Explosionsgefahr bei Verwendung inkorrekter Batterien.
Als Ersatzbatterien dürfen nur Batterien vom gleichen Typ oder
vom Hersteller empfohlene Batterien verwendet werden.
Entsorgung der gebrauchten Batterien nur nach den vom
Hersteller angegebenen Anweisungen.

SHARP®

COPYRIGHT © 2000 BY SHARP CORPORATION
All rights reserved.
Printed in USA.
No part of this publication may be reproduced,
stored in a retrieval system, or transmitted,
in any form or by any means,
electronic; mechanical; photocopying; recording or otherwise
without prior written permission of the publisher.

Trademark Acknowledgments

Microsoft Windows, MS-DOS, and Windows NT are trademarks of Microsoft Corporation in the U.S.A. and other countries.

Macintosh, Power Macintosh, Mac OS, LaserWriter, and AppleTalk are registered trademarks of Apple Computer, Inc.

IBM, PC/AT, and PowerPC are trademarks of International Business Machines Corporation.

Pentium is a registered trademark of Intel Corporation.

PCL is a trademark of the Hewlett-Packard Company.

PostScript® is a registered trademark of Adobe Systems Incorporated.

NetWare is a registered trademark of Novell, Inc.

All other trademarks and copyrights are the property of their respective owners.

SHARP CORPORATION
Digital Document Systems Group
Quality & Reliability Control Center
Yamatokoriyama, Nara 639-1186, Japan
2000 April Printed in USA